# STANDARD DETAILS

February 2024

City of Auburn
Engineering Services
Public Works Department
25 West Main Street
Auburn, WA 98001-4998

**Approved By:**

Jacob Sweeting, P.E. 2/7/24
Assistant Director of Engineering Services/City Engineer Date

**This page intentionally left blank.**

# PREFACE FOR THE CITY OF AUBURN STANDARD DETAILS

Per Auburn City Code (ACC) 12.04.020, all public work construction contracts of the City, including but not limited to streets and sidewalks, storm water and sanitary sewer systems, and water systems, and all work within City public right-of-way performed by the City and others shall conform to the Engineering Construction Standards (ECS). The ECS apply to City capital projects and to work performed by developers and others under construction permits (CON), grading permits (GRA), storm permits (STM), other utility permits, and public facility extensions (FAC). The City of Auburn has adopted the ECS to require the standardization of design and construction elements for consistency, to assure that public safety needs are met, and to comply with Local, State, and Federal regulations. This Standard Details document is a sub-part of the ECS.

Unless otherwise noted, references to specifications sections in the Standard Details refer to the Washington State Department of Transportation's (WSDOT) Standard Specifications (M41-10) for Road, Bridge and Municipal Construction, 2024 edition publication (Standard Specifications), as modified by City of Auburn Special Provisions.

**This page intentionally left blank.**

# TABLE OF CONTENTS


| NAME | NUMBER |
|---|---|
| **GENERAL DETAILS** | |
| BANNER DETAIL | G-01 |
| TEMPORARY CONSTRUCTION SITE SIGN BOARD (4'x4') | G-02 |
| TEMPORARY H.U.D. CONSTRUCTION SITE SIGN BOARD (4'x4') | G-04 |
| TEMPORARY CONSTRUCTION SITE SIGN BOARD (8'x4') | G-05 |
| **WSDOT STANDARD PLANS (INCLUDED BY REFERENCE ONLY)** | |
| PULL BOX (CITY TELECOMMUNCATIONS PULL BOX) | J-90.10 |
| SMALL CABLE VAULT (CITY TELECOMMUNCATIONS SPLICE VAULT) | J-90.21 |
| **TEMPORARY EROSION AND SEDIMENT CONTROL (TESC) DETAILS**<br>**For additional TESC details and figures see the City of Auburn SWMM** | |
| TEMPORARY CONSTRUCTION ENTRANCE/EXIT | E-01 |
| SILT CONTROL FENCE | E-02 |
| CATCH BASIN INLET PROTECTION | E-03 |
| ALTERNATE CATCH BASIN INLET PROTECTION | E-04 |
| GRADING/EROSION DISCHARGE CONTROL STRUCTURE | E-05 |
| **TRAFFIC DETAILS** | |
| TYPICAL PIPE TRENCH BACKFILL | T-01 |
| EXISTING ROADWAY RESTORATION OF UTILITY TRENCHES | T-02 |
| EXISTING ROADWAY RESTORATION OF UTILITY TRENCHES IN INTERSECTION | T-02A |
| TYPICAL BOLLARD INSTALLATION | T-03 |
| DRIVEWAY WIDTHS AND LOCATION | T-04 |
| ADJUSTMENT OF NEW AND EXISTING UTILITY STRUCTURES TO FINISH GRADE | T-05 |
| STREET TREE | T-06 |
| NEIGHBORHOOD DELIVERY AND COLLECTION BOX UNIT (N.D.C.B.U.) INSTALLATION | T-07 |
| NEIGHBORHOOD DELIVERY & COLLECTION BOX UNIT (N.D.C.B.U.) SINGLE UNIT | T-08 |
| NEIGHBORHOOD DELIVERY & COLLECTION BOX UNIT (N.D.C.B.U.) MULTIPLE UNITS | T-09 |
| DOUBLE CENTERLINE WITH RAISED PAVEMENT MARKERS | T-12 |
| CEMENT CONCRETE SIDEWALK WITH LANDSCAPE STRIP | T-13 |
| PERVIOUS CEMENT CONCRETE SIDEWALK | T-14 |
| CEMENT CONCRETE SIDEWALK WITHOUT LANDSCAPE STRIP | T-15 |
| BICYCLE LANE MARKINGS | T-17 |
| LUMINAIRE AND CONDUIT LAYOUT DETAIL | T-18 |
| LUMINAIRE POLE | T-19 |
| UNIFORM LUMINAIRE WIRING DETAIL | T-20 |
| POWER SERVICE CABINET DETAIL | T-21 |
| TRAFFIC SIGNAL CONTROLLER & FOUNDATION DETAIL | T-22 |
| TELECOMMUNICATION AND LUMINAIRE ELECTRICAL TRENCH | T-23 |
| TYPICAL SIGN POST INSTALLATION | T-24 |

| NAME | NUMBER |
|---|---|
| MAST ARM MOUNTED, STREET NAME SIGN DETAIL | T-25 |
| POST MOUNTED, STREET NAME SIGN DETAIL | T-26 |
| REPAIR OF EXISTING CEMENT CONCRETE PANEL IN ROADWAY | T-27 |
| DOWNTOWN PEDESTRIAN POLE MOUNT LIGHTING STANDARD | T-28,28A,28B |
| LOCAL RESIDENTIAL ORNAMENTAL STREET LIGHTING STANDARD | T-29 |
| TYPICAL PLAN FOR TREE GRATE | T-30 |
| PRIVATE ACCESS ROAD / SHARED DRIVEWAY | T-31 |
| PRECAST CONCRETE DUAL FACED SLOPED MOUNTABLE CURB RETROFIT | T-32 |
| STANDARD DRIVEWAY - OFFSET APRON | T-34 |
| ALTERNATE DRIVEWAY - INLINE (DROP) APRON | T-35 |
| STREET LIGHTING LAMP SCHEDULE | T-37 |
| DOWNTOWN DECORATIVE TYPE III COMBO LIGHTING & MAST ARM SIGNAL | T-38 |
| DOWNTOWN DECORATIVE LIGHT POLE | T-39 |
| "NO PARKING" SIGN | T-40 |
| CONCRETE TRAFFIC CURB & GUTTER TO HMA WEDGE CURB TRANSITION | T-41 |
| SPEED CUSHION DETAIL | T-42 |
| SPEED CUSHION PLAN | T-42A |
| DOWNTOWN PEDESTRIAN CROSSWALK | T-43 |
| DOWNTOWN BRICK PAVER BAND | T-44 |
| TYPICAL TRAFFIC BARRICADES | T-45 |
| POURED IN PLACE MONUMENT TYPE A MODIFIED | T-46 |
| CAST-IN-PLACE DUAL MOUNTABLE CEMENT CONCRETE TRAFFIC CURB | T-47 |
| SENSITIVE AREA SIGN COMMERCIAL AQUATIC | T-48 |
| DOWTOWN PEDESTRIAN PUSH BUTTON STANDARDS | T-49 |
| RECTANGULAR RAPID FLASHING BEACON | T-50a, 50b |
| **WSDOT STANDARD PLANS (INCLUDED BY REFERENCE ONLY)** | |
| RAISING BEAM GUARDRAIL DETAIL | C-1 |
| BEAM GUARDRAIL ANCHOR TYPE 2 | C-6a |
| CEMENT CONCRETE CURBS | F-10.12 |
| PARALLEL CURB RAMP | F-40.12 |
| PERPENDICULAR CURB RAMP | F-40.15 |
| SINGLE DIRECTION CURB RAMP | F-40.16 |
| DETECTABLE WARNING SURFACE | F-45.10 |
| CEMENT CONCRETE DRIVEWAY ENTRANCE TYPES 1, 2,3, & 4 | F-80.10 |
| LOCKING LID STANDARD JUNCTION BOX TYPES 1 & 2 | J-40.10 |
| TYPE 3 BARRICADE | K-80.20 |
| LEFT TURN CHANNELIZATION REDUCED TAPERS | M-3.20 |
| TWO-WAY LEFT TURN AND MEDIAN CHANNELIZATION | M-3.40 |
| DOUBLE LEFT-TURN CHANNELIZATION | M-3.50 |
| RIGHT TURN CHANNELIZATION | M-5.10 |
| BICYCLE LANE SYMBOL LAYOUT | M-9.50 |

| NAME | NUMBER |
|---|---|
| RAILROAD CROSSING LAYOUT | M-11.10 |
| CROSSWALK LAYOUT | M-15.10 |
| LONGITUDINAL MARKING PATTERNS | M-20.10 |
| SYMBOL MARKINGS - TRAFFIC ARROWS FOR LOW-SPEED ROADWAYS | M-24.40 |
| **SANITARY SEWER AND STORM DRAIN DETAILS** | |
| SIDE SEWER STUB | S-01 |
| PRIVATE SANITARY SIDE SEWER CLEAN OUT | S-02 |
| PUBLIC SIDE SEWER CLEANOUT (8" OR LARGER) | S-03 |
| 24" DIA. MANHOLE FRAME AND COVER | S-04 |
| RETROFIT EXISTING MANHOLE WITH INSIDE DROP | S-05 |
| EXTRA SHALLOW MANHOLE DETAIL | S-06 |
| MANHOLE AT END OF SANITARY SEWER LINE | S-07 |
| MANHOLE CHANNEL CONSTRUCTION | S-08 |
| FLOW RESTRICTOR | S-09,9a |
| COVERED CURB OPENING INLET | S-10 |
| **WSDOT STANDARD PLANS (INCLUDED BY REFERENCE ONLY)** | |
| CATCH BASIN TYPE 1 | B-5.20 |
| CATCH BASIN TYPE 2 | B-10.20 |
| MANHOLE TYPE 1 | B-15.20 |
| MANHOLE TYPE 2 | B-15.40 |
| COMBINATION INLET | B-25.20 |
| CONCRETE INLET | B-25.60 |
| CEMENT CONCRETE CURB AND GUTTER PAN | F-10.16 |
| **WATER DETAILS** | |
| WATER MAIN BLOCKING | W-01 |
| TYPICAL AIR AND VACUUM RELIEF VALVE DETAIL | W-02 |
| 2" PERMANENT BLOW OFF ASSEMBLY | W-03 |
| TEMPORARY BLOW OFF DETAIL | W-04 |
| WATER SAMPLING STATIONING DETAIL | W-05 |
| 3/4" TO 2" IRRIGATION FROM DOMESTIC SERVICE LINE (SINGLE FAMILY) | W-06 |
| 5 1/4" M.V.O. HYDRANT SETTING DETAIL | W-07 |
| FIRE HYDRANT LOCATION IN CUT OR FILL W/ GUARD POSTS | W-08 |
| 2" FIRE SPRINKLER LINES WITH 3/4" TO 2" DOMESTIC SERVICE LINE | W-09 |
| 1" WATER SERVICE INSTALLATION | W-13 |
| 1 1/2" & 2" WATER SERVICE | W-14 |
| WATER METER LOCATION & MATERIAL SCHEDULE | W-15 |
| 3" OR LARGER WATER METER INSTALLATION | W-16,16a |
| VALVE WRENCH EXTENSION BOX | W-17 |
| C.I. VALVE BOX TOP & VALVE BOX COVER | W-18 |
| 5" C.I. SOIL PIPE VALVE BOX EXTENSION & C.I. VALVE BOX BOTTOM | W-19 |
| NON-SINGLE FAMILY SERVICE LINES | W-20 |

| NAME | NUMBER |
|---|---|
| TEMP. COMBINATION HYDRANT METER/ REDUCED PRESSURE BACKFLOW ASSY. | W-21 |
| REDUCED PRESSURE BACKFLOW ASSY. (OUTSIDE INSTALLATION) | W-22 |
| REDUCED PRESSURE BACKFLOW ASSY. (INSIDE INSTALLATION) | W-23 |
| DOUBLE CHECK VALVE ASSEMBLY (OUTSIDE INSTALLATION) | W-24 |
| DOUBLE CHECK VALVE ASSEMBLY (INSIDE INSTALLATION) | W-25 |
| PIPE CASING DETAIL | W-26 |

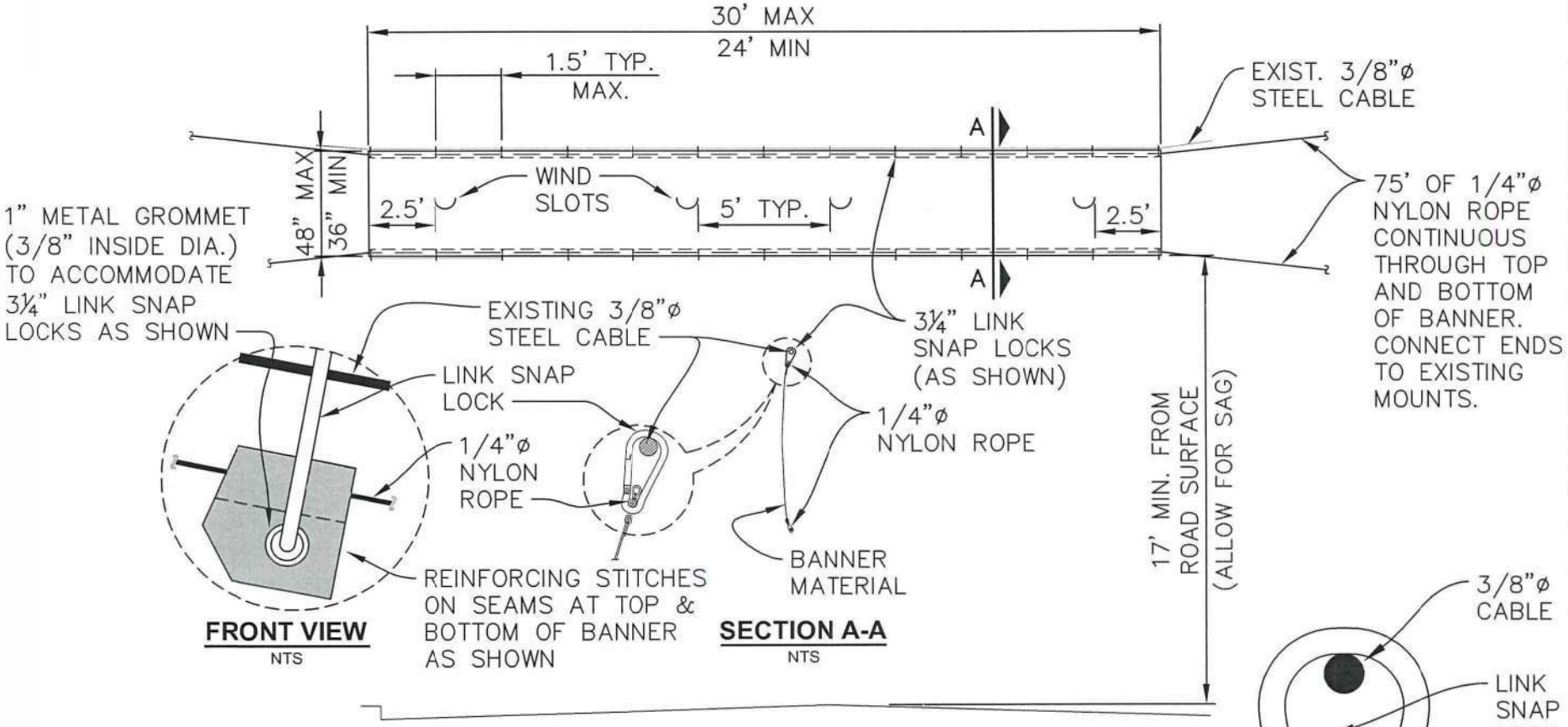


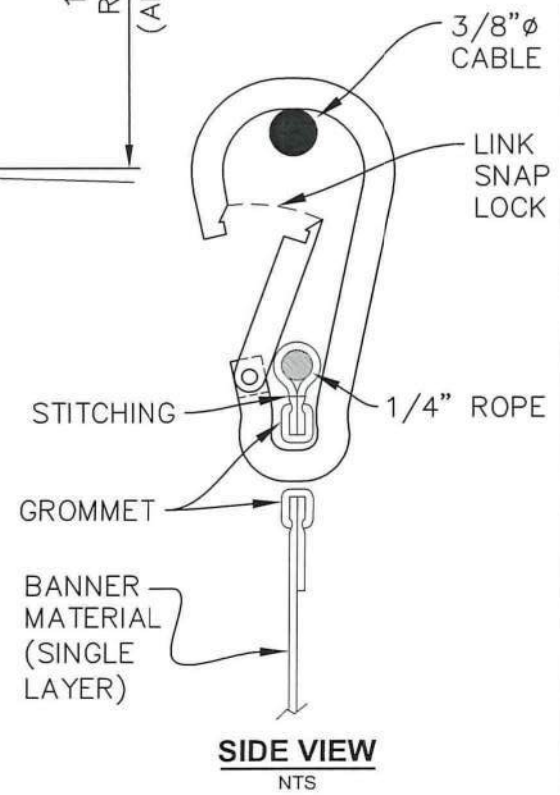


**NOTES:**

1. WIND SLOT SHALL BE 6" DIAMETER HALF CIRCLE, MINIMUM. THEY MAY BE LOCATED IN AREAS WHICH DO NOT DETRACT FROM THE BANNER.
2. WIND SLOTS SHALL BE SPACED ONE SLOT PER 5 FT. OF BANNER LENGTH.
3. BANNER SHALL BE DURABLE TEARING RESISTANT MATERIAL, I.E., NYLON, VINYL, ETC.
4. BANNER SHALL BE CONNECTED TO EXISTING CABLE WITH DETACHABLE 3¼"" LINK SNAP LOCKS AS SHOWN. OTHER METAL RING TYPES WILL NOT BE ACCEPTED. APPLICANT SHALL PROVIDE A MINIMUM OF 40 LINK SNAP LOCKS INSTALLED ON THE TOP AND BOTTOM OF BANNER AS SHOWN (20 ON EACH SIDE). NOT ALL LOCATIONS REQUIRE LINK SNAP LOCKS ON THE BOTTOM. APPLICANT TO VERIFY DURING BANNER APPLICATION SUBMITTAL.
5. REINFORCING STITCHES SHALL BE PROVIDED ON SEAMS AT TOP & BOTTOM OF BANNER.
6. BANNER SHALL BE CONSTRUCTED USING A SINGLE LAYER OF BANNER MATERIAL. DOUBLE SIDED BANNERS SHALL HAVE PRINT ON BOTH SIDES OF THE SINGLE LAYER MATERIAL.
7. BANNER CONSTRUCTION SHALL BE APPROVED BY THE CITY ENGINEER PRIOR TO BANNER BEING DEPLOYED AT THE PERMITTED LOCATION.

APPROVED BY CITY ENGINEER: Chris Gruen 12/26/19

DATE:

CITY OF AUBURN WASHINGTON

PUBLIC WORKS DEPARTMENT

BANNER DETAIL

STANDARD DETAIL: G-01.3

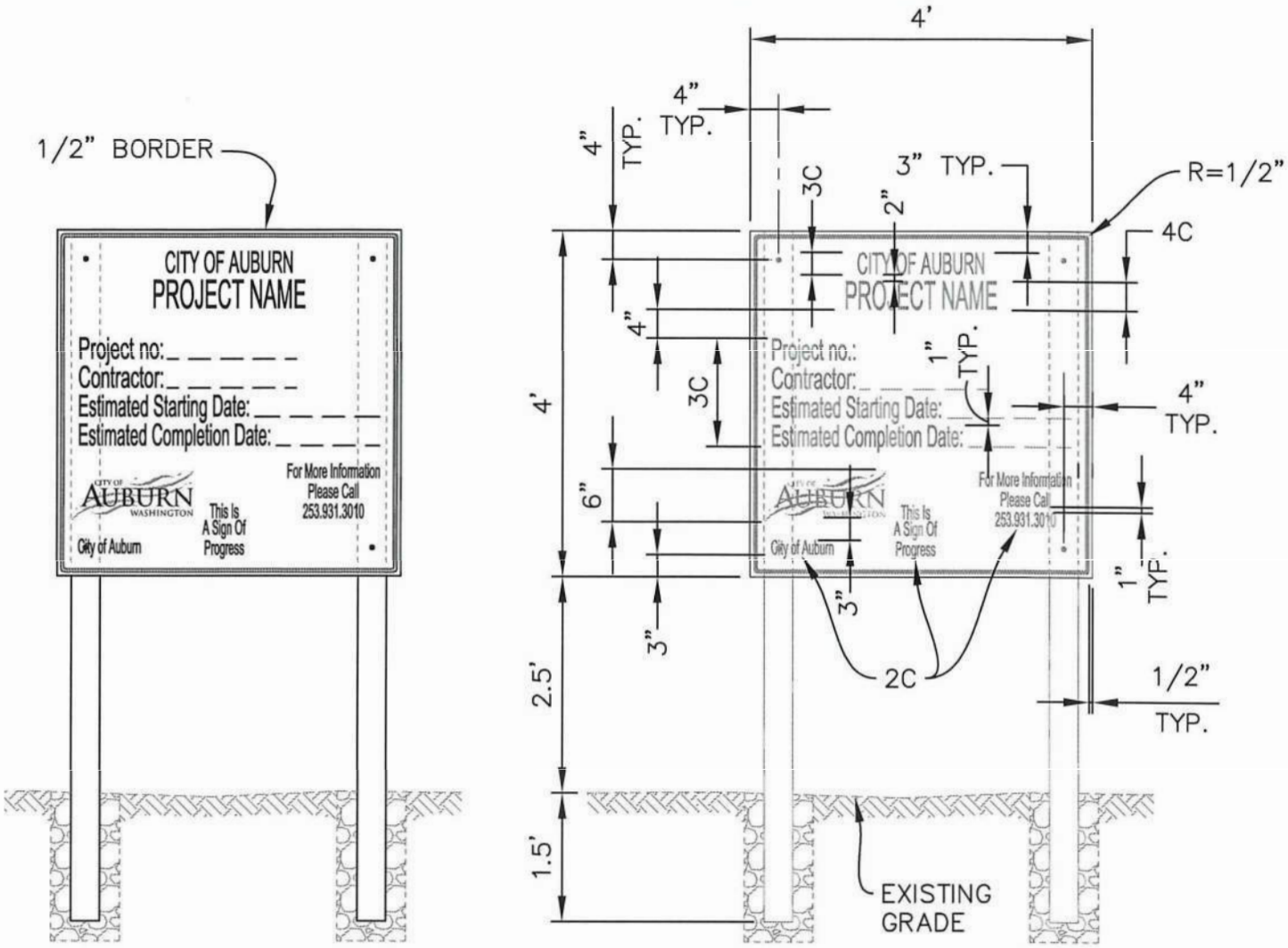


## CONSTRUCTION NOTES:

1. SIGN BOARD SHALL BE CONSTRUCTED FROM 4'x4'x3/4" EXTERIOR MARINE PLYWOOD.
2. ALL LETTERS AND NUMERALS SHALL BE SERIES C.
3. LETTERING SHALL BE BLACK ON WHITE BACKGROUND USING 3M SCOTCHLITE EC FILM SERIES 1700 OVER 3M DIAMOND GRADE VIP OR BETTER.
4. SIGN AND POSTS SHALL BE PLANTED INTO AN UNYIELDING SOIL AND REINFORCED BY TAMPING GRAVEL OR SMALL ROCKS WHEN NECESSARY TO ASSURE RESISTANCE AGAINST STRONG WIND. BRACING MAY BE REQUIRED AT SOME LOCATIONS AS DIRECTED BY THE ENGINEER.
5. SIGN BOARD SHALL BE FABRICATED AND MOUNTED ON 2 EACH 4"x4"x8' POSTS WITH THE FOLLOWING GALVANIZED FASTENERS AND SIZES AS INDICATED:

   4 EA. 1/4" DIA.x6"

   4 EA. 1/4" NUTS

   8 EA. 1/4" WASHERS

| APPROVED BY CITY ENGINEER: | DATE: 8/5/2016 | CITY OF AUBURN WASHINGTON | TEMPORARY CONSTRUCTION SITE SIGN BOARD (4'x4') |
|---|---|---|---|
| COMMUNITY DEVELOPMENT & PUBLIC WORKS DEPT. | | | STANDARD DETAIL: G-02.1 |

Plotted by: Craig Dobyns on 7/13/2016 File location: W:\Construction Standard Details\Approved Drawing Files (dwg)\General\STDETL-G-02.1

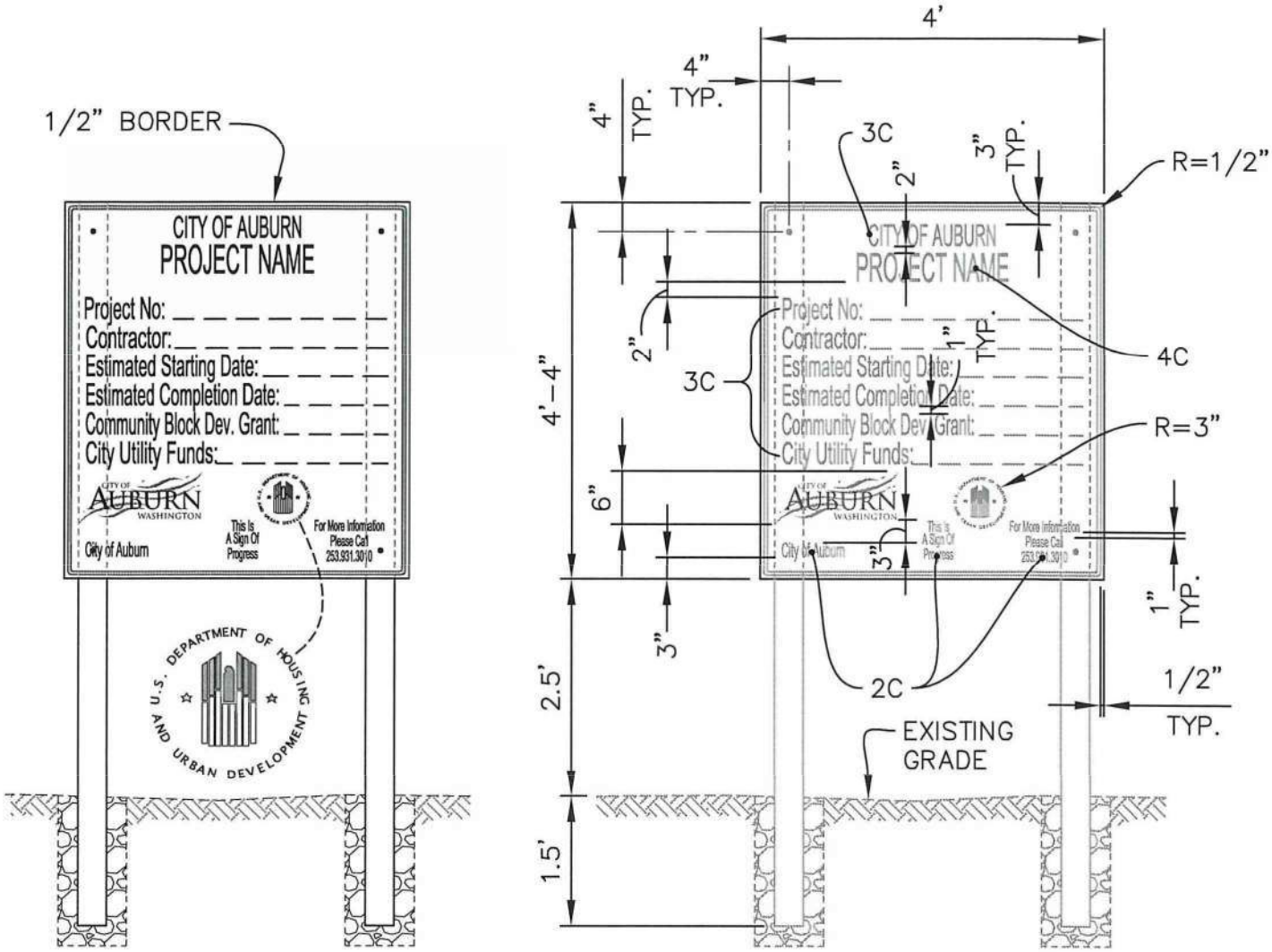


## CONSTRUCTION NOTES:

1. SIGN BOARD SHALL BE CONSTRUCTED FROM 3/4" EXTERIOR MARINE PLYWOOD.
2. ALL LETTERS AND NUMERALS SHALL BE SERIES C.
3. LETTERING SHALL BE BLACK ON WHITE BACKGROUND USING 3M SCOTCHLITE EC FILM SERIES 1700 OVER 3M DIAMOND GRADE VIP OR BETTER.
4. SIGN AND POSTS SHALL BE PLANTED INTO AN UNYIELDING SOIL AND REINFORCED BY TAMPING GRAVEL OR SMALL ROCKS WHEN NECESSARY TO ASSURE RESISTANCE AGAINST STRONG WIND. BRACING MAY BE REQUIRED AT SOME LOCATIONS AS DIRECTED BY THE ENGINEER.
5. SIGN BOARD SHALL BE FABRICATED AND MOUNTED ON 2 EACH 4"x4"x8' POSTS WITH THE FOLLOWING GALVANIZED FASTENERS AND SIZES AS INDICATED:

   4 EA. 1/4" DIA.x6"

   4 EA. 1/4" NUTS

   8 EA. 1/4" WASHERS

| APPROVED BY CITY ENGINEER: | DATE: 8/5/2016 | CITY OF AUBURN WASHINGTON | TEMPORARY H.U.D. CONSTRUCTION SITE SIGN BOARD (4'x4') |
|---|---|---|---|
| COMMUNITY DEVELOPMENT & PUBLIC WORKS DEPT. | | | STANDARD DETAIL: G-04.1 |

Plotted by: Craig Dobyne on 7/13/2016 File location: W:\Construction Standard Details\Approved Drawing Files (dwg)\General\STDETL-G-04.1

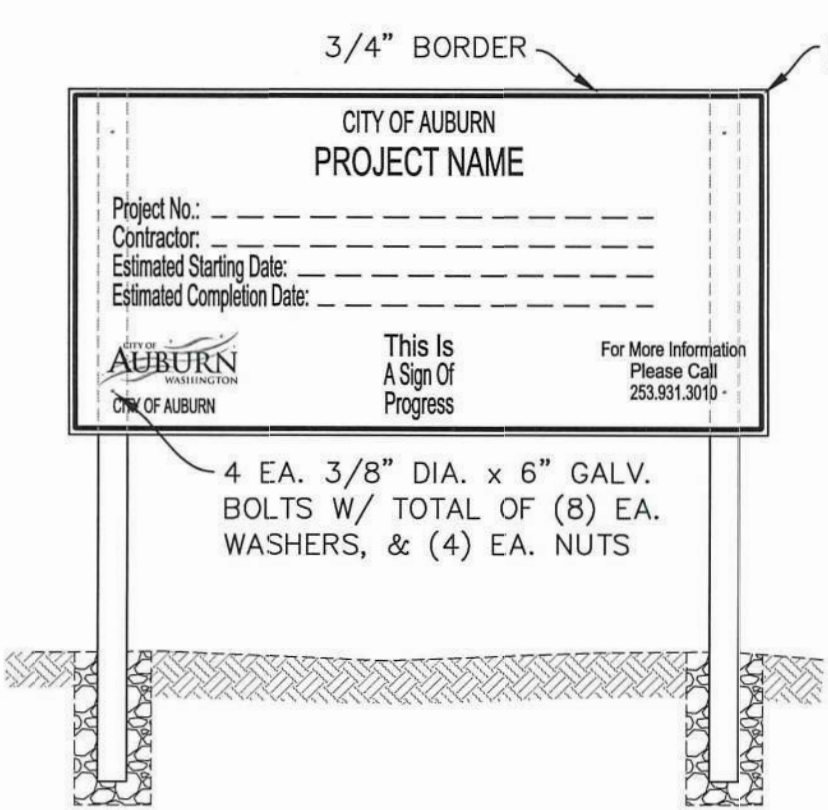


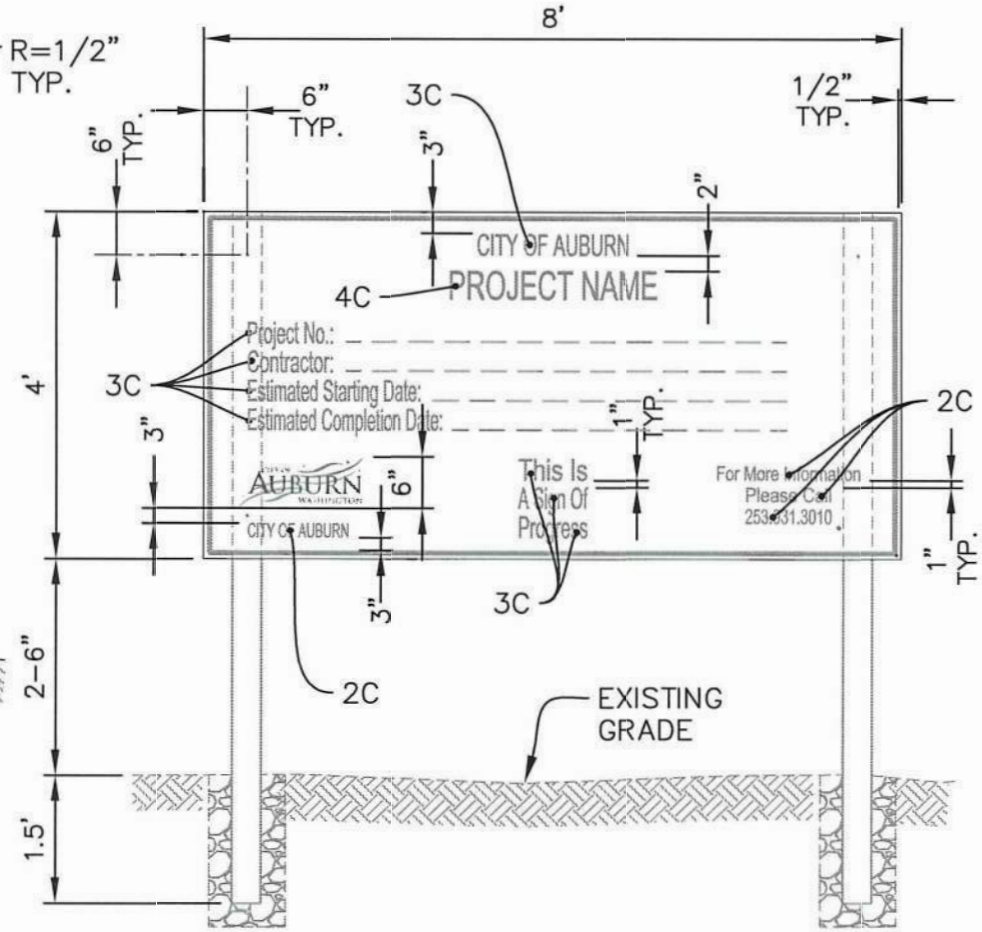


**CONSTRUCTION NOTES:**

1. SIGN BOARD SHALL BE CONSTRUCTED FROM 4'x4'x3/4" EXTERIOR MARINE PLYWOOD.
2. ALL LETTERS AND NUMERALS SHALL BE SERIES C.
3. LETTERING SHALL BE BLACK ON WHITE BACKGROUND USING 3M SCOTCHLITE EC FILM SERIES 1700 OVER 3M DIAMOND GRADE VIP OR BETTER.
4. SIGN AND POSTS SHALL BE PLANTED INTO AN UNYIELDING SOIL AND REINFORCED BY TAMPING GRAVEL OR SMALL ROCKS WHEN NECESSARY TO ASSURE RESISTANCE AGAINST STRONG WIND. BRACING MAY BE REQUIRED AT SOME LOCATIONS AS DIRECTED BY THE ENGINEER.
5. SIGN BOARD SHALL BE FABRICATED AND MOUNTED ON 2 EACH 4"x4"x8' POSTS WITH THE FOLLOWING GALVANIZED FASTENERS AND SIZES AS INDICATED:

   4 EA. 3/8" DIA.x6"
   4 EA. 3/8" NUTS
   8 EA. 3/8" WASHERS

APPROVED BY CITY ENGINEER: [signature]
DATE: 8/5/2016
CITY OF AUBURN WASHINGTON
COMMUNITY DEVELOPMENT & PUBLIC WORKS DEPT.
TEMPORARY CONSTRUCTION SITE SIGN BOARD (8'x4')
STANDARD DETAIL: G-05.1

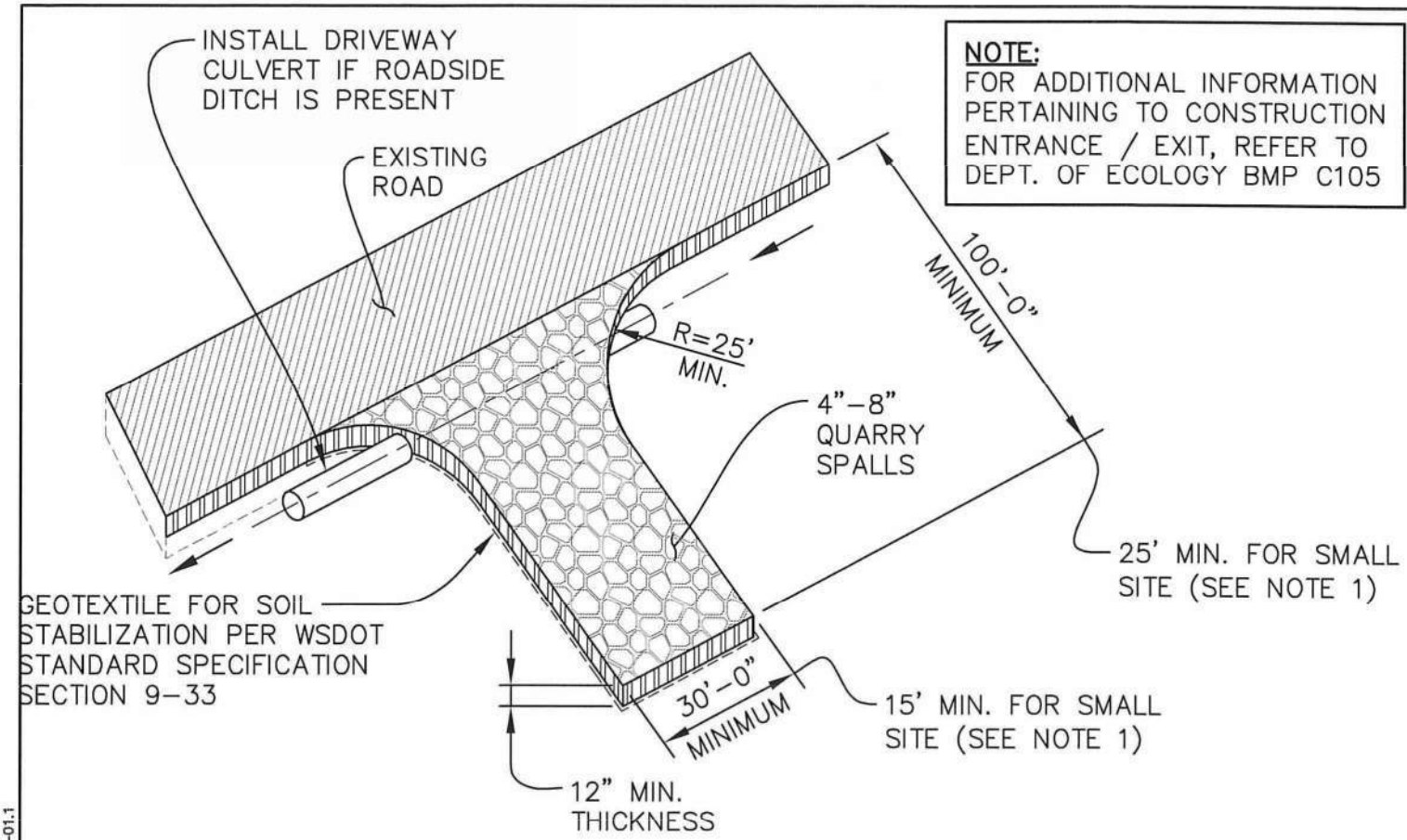


**NOTE:**
FOR ADDITIONAL INFORMATION PERTAINING TO CONSTRUCTION ENTRANCE / EXIT, REFER TO DEPT. OF ECOLOGY BMP C105

## MAINTENANCE STANDARDS:

1. SMALL SITE IS DEFINED AS A SITE THAT ADDS OR REPLACES LESS THAN 5,000 SQUARE FEET OF IMPERVIOUS SURFACE & DISTURBS LESS THAN ONE ACRE.
2. QUARRY SPALLS PLUS WOVEN GEOTEXTILE FABRIC UNDER ROCK SHALL BE ADDED AS NEEDED TO KEEP THE ENTRANCE IN CONFORMANCE WITH THESE STANDARDS.
3. IF THE ENTRANCE IS NOT PREVENTING SEDIMENT FROM BEING TRACKED ONTO PAVEMENT, THEN ALTERNATIVE MEASURES TO KEEP THE STREETS FREE OF SEDIMENT SHALL BE USED. THIS MAY INCLUDE SHOVELING, PICKUP SWEEPING, & HAND SWEEPING, AN INCREASE IN THE ENTRANCE DIMENSIONS, OR THE INSTALLATION OF A SELF-CONTAINED WHEEL WASH STATION, (REFER TO DOE BMP C-106 FOR MORE INFORMATION).
4. ANY SEDIMENT THAT IS TRACKED ONTO STREET PAVEMENT SHALL BE REMOVED IMMEDIATELY BY SHOVELING, PICKUP SWEEPING, & HAND SWEEPING. THE SEDIMENT COLLECTED BY SWEEPING SHALL BE REMOVED OR STABILIZED ONSITE. PAVEMENT SHALL NOT BE CLEANED BY WASHING DOWN THE STREET, EXCEPT WHEN SWEEPING IS INEFFECTIVE & THERE IS A THREAT TO PUBLIC SAFETY. IF IT IS NECESSARY TO WASH THE STREETS, A CONSTRUCTION OF A SMALL SUMP SHALL BE CONSIDERED. SEDIMENT WOULD THEN BE WASHED INTO THE SUMP.
5. ANY ROCK SPALLS THAT ARE LOOSENED FROM THE DRIVEWAY PAD & ONTO THE ROADWAY SHALL BE REMOVED IMMEDIATELY. VACTOR TRUCK MUST BE USED TO CLEAN CATCH BASIN IF IT BECOMES PLUGGED.
6. VEHICLES SHALL NOT ENTER OR EXIT THE SITE OTHER THAN THE CONSTRUCTION ENTRANCE(S).
7. REMOVE TEMPORARY CONSTRUCTION ENTRANCE/EXIT UPON COMPLETION OF THE ON-SITE WORK.

| APPROVED BY CITY ENGINEER: | DATE: | CITY OF AUBURN WASHINGTON | TEMPORARY CONSTRUCTION ENTRANCE / EXIT |
|---|---|---|---|
| | 8/5/2016 | | |
| COMMUNITY DEVELOPMENT & PUBLIC WORKS DEPT. | | | STANDARD DETAIL: E-01.1 |

Plotted by: Craig Dobyns on 7/13/2016 File location: M:\Construction Standard Details\Approved Drawing Files (dwg)\Erosion Control\STDETL-E-01.1

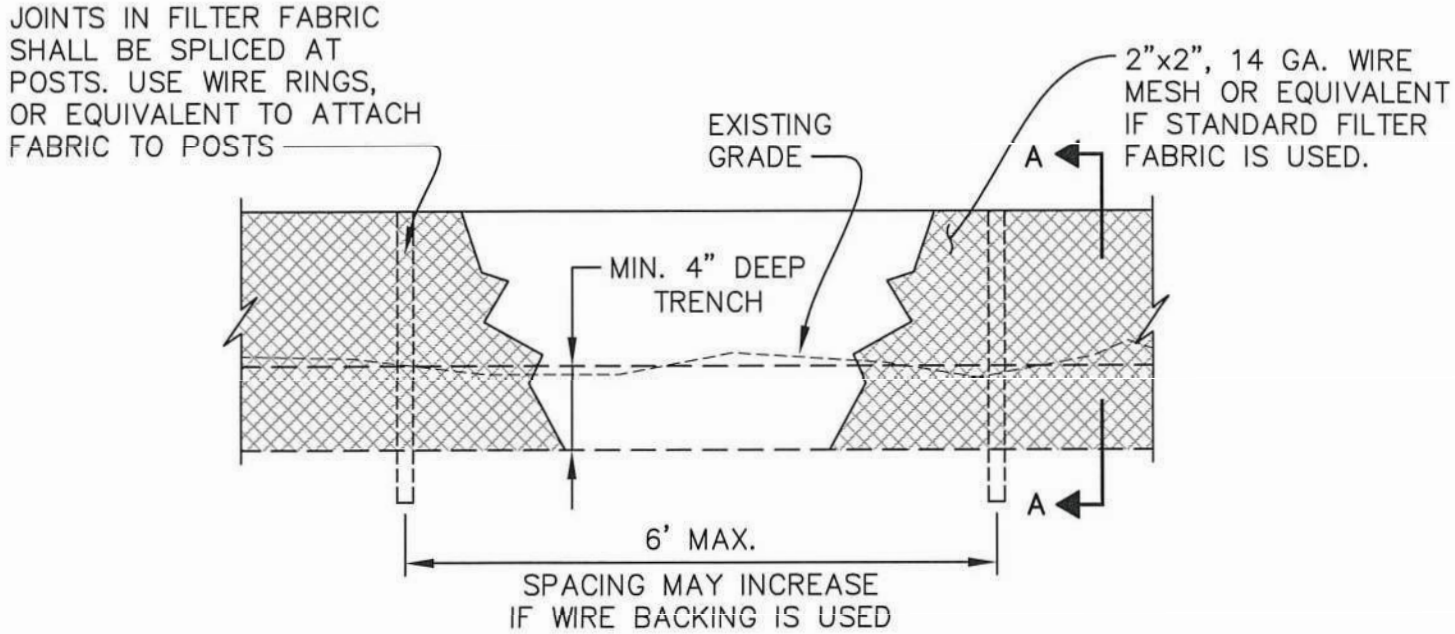


**SILT FENCE**
NOT TO SCALE

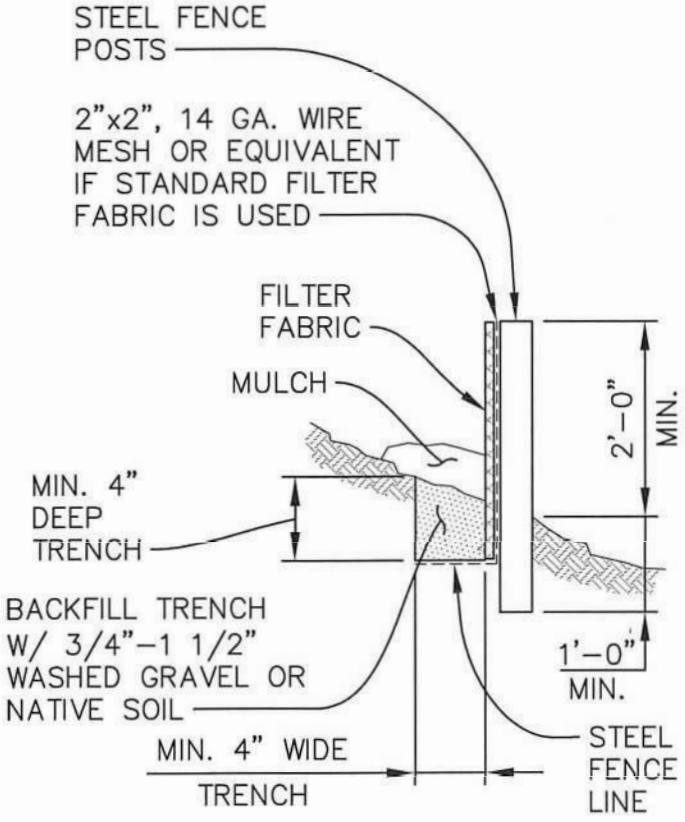


**SECTION A-A**
NOT TO SCALE

**MAINTENANCE STANDARDS:**

1. INSPECT WEEKLY ON ACTIVE SITES, MONTHLY ON INACTIVE SITES, & AFTER EACH STORM EVENT TO VERIFY PROTECTION IS STILL ADEQUATE. ANY DAMAGE SHALL BE REPAIRED IMMEDIATELY.
2. IF CONCENTRATED FLOWS ARE EVIDENT UPHILL OF THE FENCE, THEY MUST BE INTERCEPTED AND CONVEYED TO A SEDIMENT POND.
3. THE UPHILL SIDE OF THE FENCE SHALL BE PERIODICALLY CHECKED FOR SIGNS OF CLOGGING CAUSING CHANNELIZATION OF THE FLOWS PARALLEL TO THE FENCE. IN SUCH CASE, REPLACE THE FENCE AND OR REMOVE THE TRAPPED DEBRIS AND SEDIMENT.
4. SEDIMENT AND DEBRIS BUILD UP MUST BE REMOVED WHEN 6" HIGH.
5. REMOVE AND REPLACE DETERIORATED FILTER FABRIC DUE TO ULTRAVIOLET BREAKDOWN.
6. UPON COMPLETION OF WORK AND WHEN ALLOWED BY THE CITY OF AUBURN, THE CONTRACTOR SHALL REMOVE ALL FILTER FABRIC FENCE AND GRAVEL. PROVIDE FINISH GRADES WITH SURFACING MATERIAL AND LANDSCAPING AS REQUIRED.

**NOTES:**

1. FILTER FABRIC FENCES SHALL BE INSTALLED ALONG CONTOUR WHENEVER POSSIBLE.
2. FOR ADDITIONAL TECHNICAL INFORMATION, REFER TO WSDOE BMP C233.

| APPROVED BY CITY ENGINEER: | DATE: | CITY OF AUBURN WASHINGTON | SILT CONTROL FENCE |
|---|---|---|---|
| | 8/5/2016 | | |
| COMMUNITY DEVELOPMENT & PUBLIC WORKS DEPT. | | | STANDARD DETAIL: E-02.1 |

Plotted by: Craig Dobyns on 7/13/2016 File location: M:\Construction Standard Details\Approved Drawing Files (dwg)\Erosion Control\STDETL-E-02.1

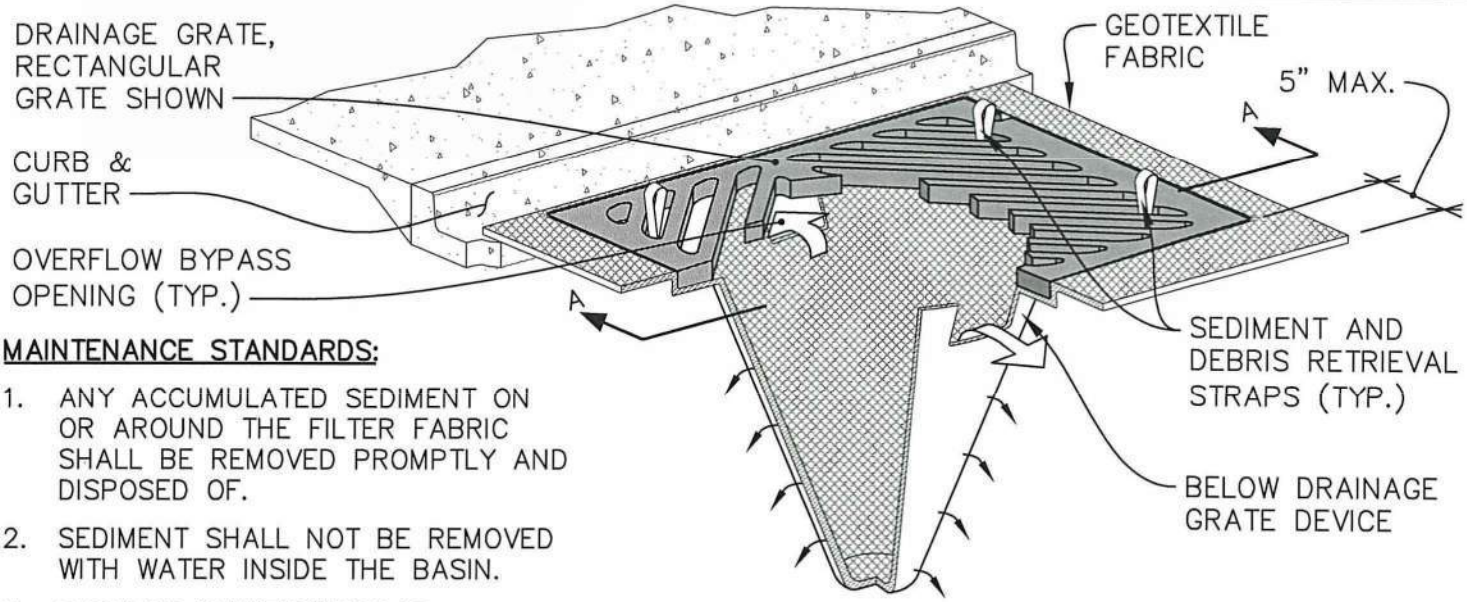


SCHEMATIC DETAIL VIEW
NOT TO SCALE

**MAINTENANCE STANDARDS:**

1. ANY ACCUMULATED SEDIMENT ON OR AROUND THE FILTER FABRIC SHALL BE REMOVED PROMPTLY AND DISPOSED OF.
2. SEDIMENT SHALL NOT BE REMOVED WITH WATER INSIDE THE BASIN.
3. REGULAR MAINTENANCE IS REQUIRED. INSPECT WEEKLY ON ACTIVE SITES, MONTHLY ON INACTIVE SITES, & AFTER EACH STORM EVENT TO VERIFY PROTECTION IS STILL ADEQUATE. REPLACE AS NEEDED.
4. ANY SEDIMENT IN THE CATCH BASIN INSERT SHALL BE REMOVED WHEN IT HAS FILLED 1/3 OF THE STORAGE CAPACITY OF THE FILTER DEVICE.
5. THE GEOTEXTILE FABRIC FILTER MEDIA SHALL BE INSPECTED AFTER EACH STORM EVENT & CLEANED OR REPLACED WHEN 1/3 OF STORAGE CAPACITY IS REACHED, OR MONTHLY, UNDER NORMAL WEATHER CONDITIONS, WHICHEVER OCCURS FIRST.
6. REMOVE CATCH BASIN INLET PROTECTION DEVICE UPON COMPLETION OF THE WORK.

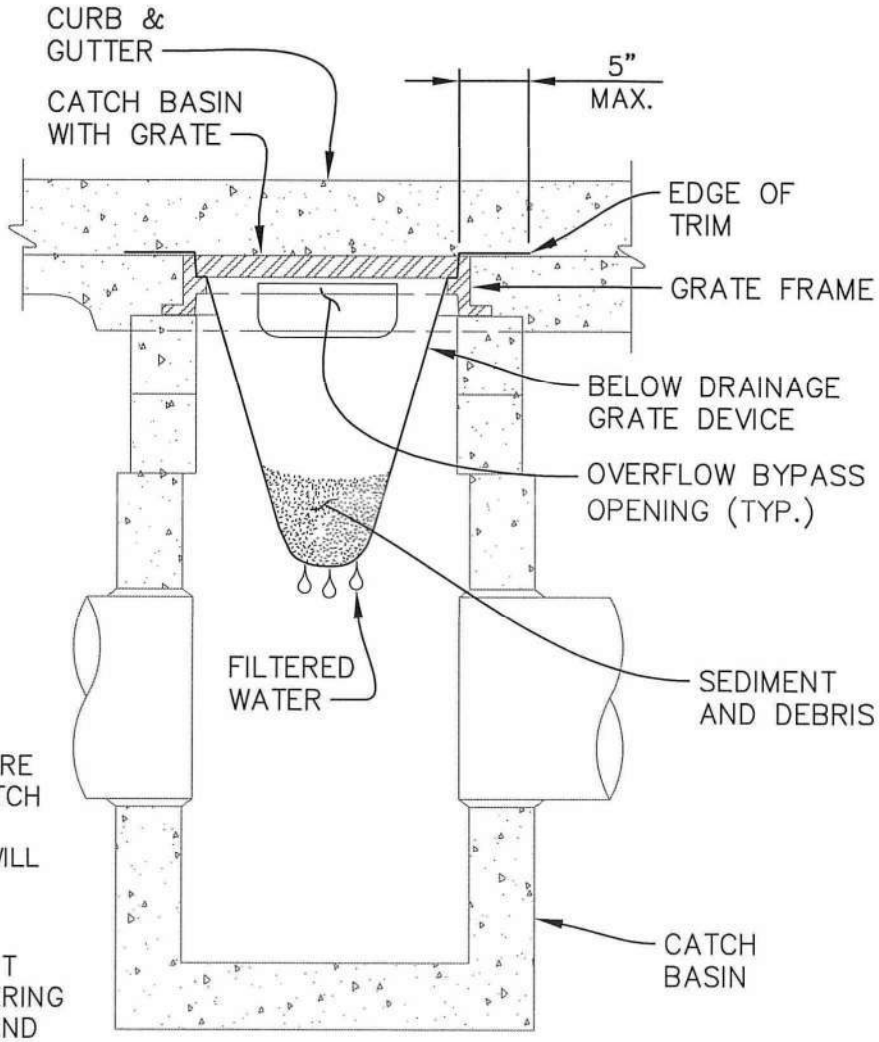


SECTION A–A
NOT TO SCALE

**NOTES:**

1. THIS DEVICE IS APPLICABLE TO WHERE PONDING OF WATER ABOVE THE CATCH BASIN WILL NOT CAUSE TRAFFIC PROBLEMS AND WHERE OVERFLOW WILL NOT RESULT
2. THIS INSERT DEVICE SHALL HAVE A MINIMUM OF 0.5 C.F. OF STORAGE. IT SHALL ALSO PROVIDE FOR DE–WATERING STORED SEDIMENT, AN OVERFLOW, AND EASE OF MAINTENANCE.
3. FOR ADDITIONAL TECHNICAL INFORMATION, REFER TO WSDOE BMP C220.

| APPROVED BY CITY ENGINEER: | DATE: | CITY OF AUBURN WASHINGTON | CATCH BASIN INLET PROTECTION |
|---|---|---|---|
| | 2/20/2018 | | |
| COMMUNITY DEVELOPMENT & PUBLIC WORKS DEPT. | | | STANDARD DETAIL: E–03.2 |

Plotted by: Craig Dobyns on 2/2/2018 File location: M:\Construction Standard Details\Current Working DWG\Erosion Control\STDETL-E-03.2

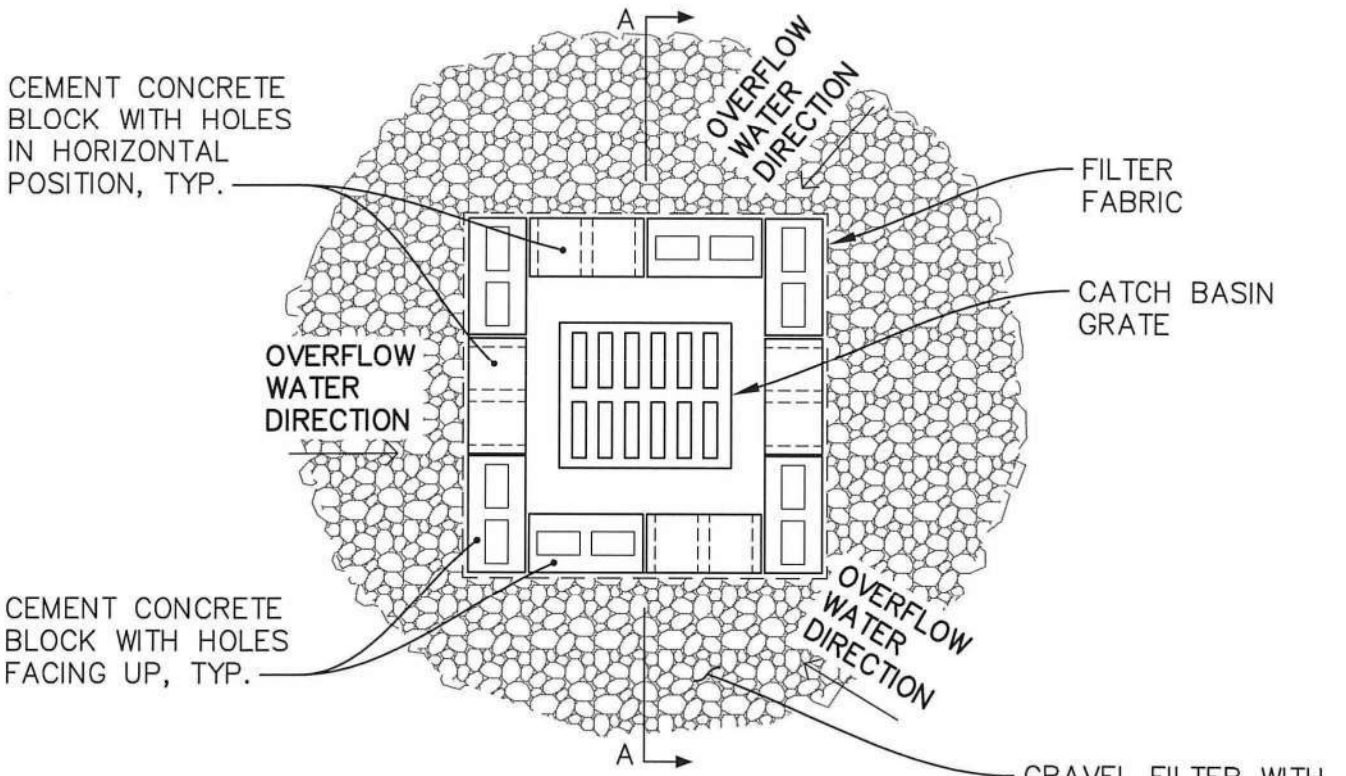


**AREA DRAIN**
**PLAN VIEW**
NTS

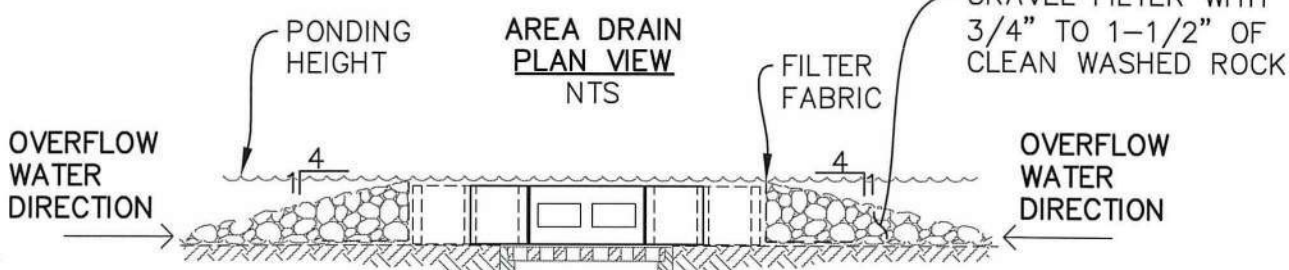


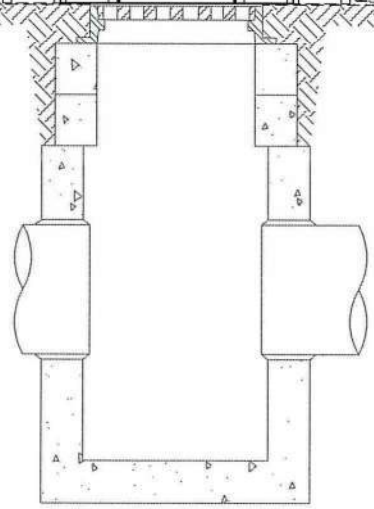

**SECTION A–A**
NTS

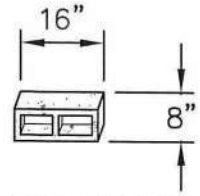


**TYPICAL CEMENT CONCRETE BLOCK**
NTS

**MAINTENANCE STANDARDS:**

1. ANY ACCUMULATED SEDIMENT ON OR AROUND THE GRAVEL FILTER SHALL BE REMOVED PROMPTLY AND DISPOSED OF.
2. SEDIMENT SHALL NOT BE REMOVED WITH WATER INSIDE THE CATCH BASIN.
3. INSPECT WEEKLY ON ACTIVE SITES, MONTHLY ON INACTIVE SITES, & AFTER EACH STORM EVENT TO VERIFY PROTECTION IS STILL ADEQUATE. REPLACE AS NEEDED.
4. REMOVE CATCH BASIN PROTECTION UPON COMPLETION OF PROJECT.
5. THIS DETAIL IS APPLICABLE ONLY WHERE PAVEMENT DOES NOT EXIST AROUND THE CATCH BASIN.

**NOTES:**

1. BASIN INLET IN SOME AREAS MAY REQUIRE (2) STACKS OF CEMENT CONCRETE BLOCKS, AS DIRECTED BY THE ENGINEER.
2. FOR ADDITIONAL TECHNICAL INFORMATION, REFER TO WSDOE BMP C220.

| APPROVED BY CITY ENGINEER: | DATE: | CITY OF AUBURN WASHINGTON | ALTERNATE CATCH BASIN INLET PROTECTION |
|---|---|---|---|
| | 2/20/2018 | | |
| COMMUNITY DEVELOPMENT & PUBLIC WORKS DEPT. | | | STANDARD DETAIL: E-04.2 |

Plotted by: Craig Dobyns on 1/23/2018 File location: M:\Construction Standard Details\Current Working DWG\Erosion Control\STDETL-E-04.2

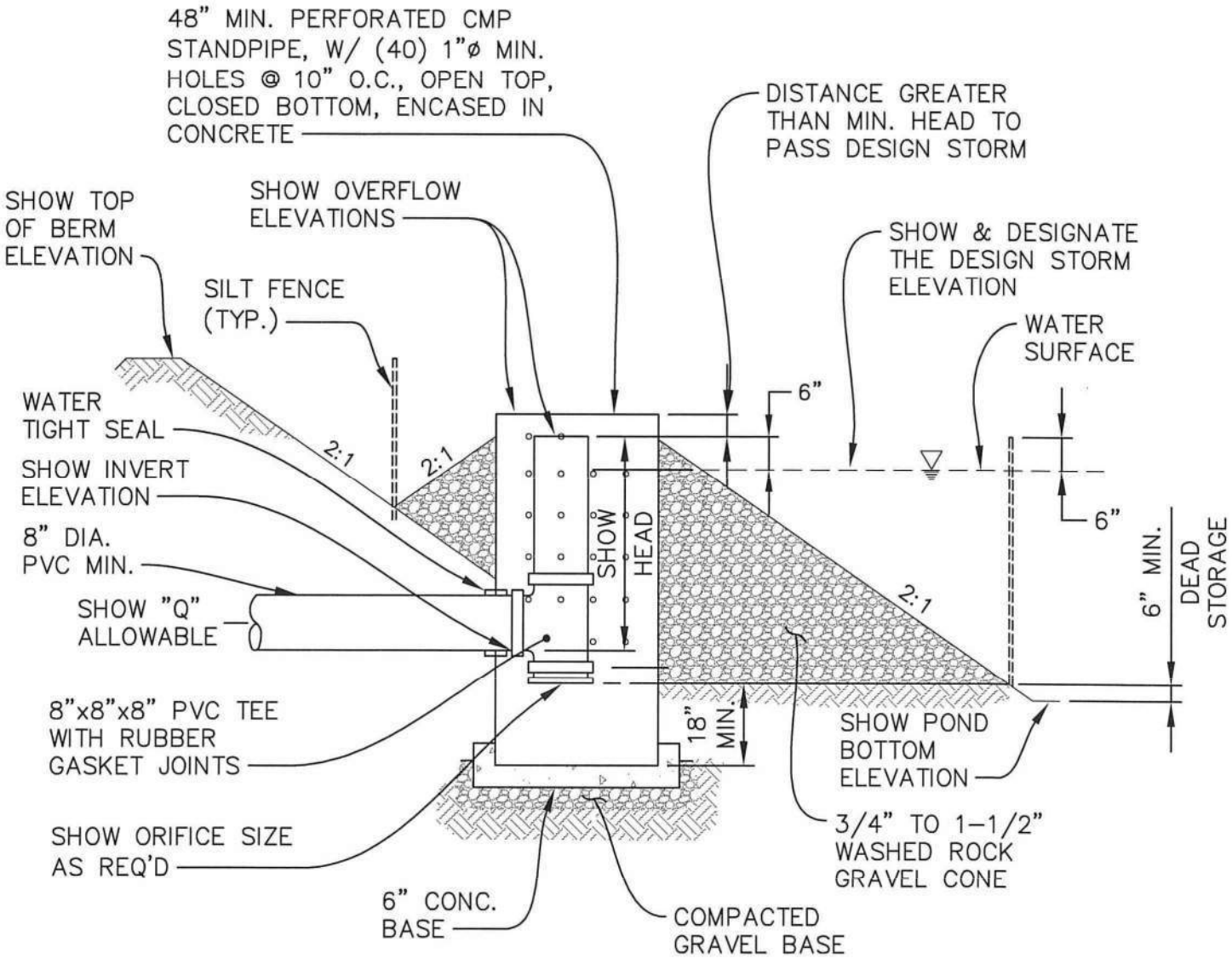


**NOTES:**

1. PROVIDE A RIP RAP LINED SPILLWAY, 6" MINIMUM ABOVE STANDPIPE, OPEN TOP.
2. A MULTIPLE PHASE POND SEPARATED BY PERVIOUS GRAVEL WINDOW MAY BE REQUIRED TO CONTROL AND TRAP SEDIMENT, AND TO REDUCE DISCHARGE ENERGY.
3. POND CHARACTERISTICS SUCH AS DESIGN VOLUME, INFLOW, OUTFLOW, AND MAXIMUM HEAD SHALL BE SHOWN ON PLANS.
4. THE OUTLET PIPE SHALL BE A MINIMUM OF 8" DIAMETER.
5. INDICATE SEASONAL HIGH GROUND WATER ELEVATION.
6. THIS DETAIL IS FOR DESIGN GUIDANCE ONLY, THE ENGINEER IS RESPONSIBLE FOR PROVIDING THE NECESSARY ELEVATIONS AND ORIFICE SIZES.
7. REFER TO WSDOE BMP 220 FOR ADDITIONAL INFORMATION.

| APPROVED BY CITY ENGINEER: | DATE: 8/5/2016 | CITY OF AUBURN WASHINGTON | GRADING/EROSION DISCHARGE CONTROL STRUCTURE |
|---|---|---|---|
| COMMUNITY DEVELOPMENT & PUBLIC WORKS DEPT. | | | STANDARD DETAIL: E-05.1 |

Plotted by: Craig Dobyns on 7/13/2016 File location: M:\Construction Standard Details\Approved Drawing Files (dwg)\Erosion Control\STDETL-E-05.1

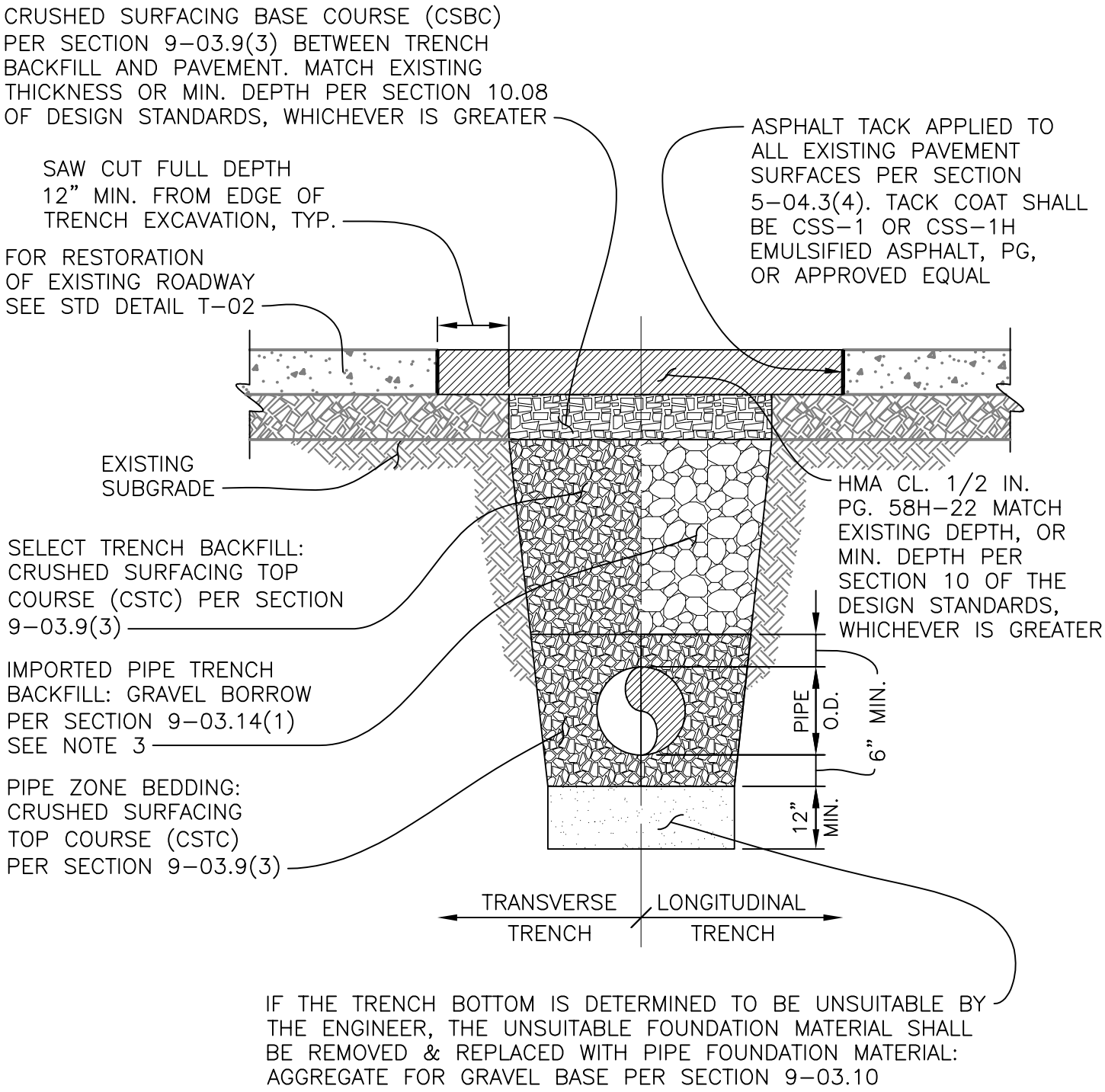


**NOTES:**

1. TRANSVERSE TRENCHES ARE TRENCHES THAT RUN PERPENDICULAR OR DIAGONAL ACROSS THE TRAVELED WAY OF THE ROAD. LONGITUDINAL TRENCHES ARE TRENCHES THAT RUN PARALLEL WITH THE TRAVELED WAY OF THE ROAD.
2. ALL BACKFILL SHALL BE COMPACTED TO 95% MAXIMUM DENSITY.
3. MAY USE NATIVE MATERIAL FOR LONGITUDINAL TRENCH BACKFILL IF MATERIAL MEETS REQUIREMENTS OF SECTION 9-03.14(1).

| | | | |
|---|---|---|---|
| APPROVED BY CITY ENGINEER: Jacob Sweeting | DATE: 2/7/24 | CITY OF AUBURN WASHINGTON | TYPICAL PIPE TRENCH BACKFILL |
| PUBLIC WORKS DEPARTMENT | | | STANDARD DETAIL: T-01.6 |

Plotted by: Craig Dobyns on 1/10/2024 File location: M:\Construction Standard Details\Current Working DWG\Traffic\STDETL-T-01.6

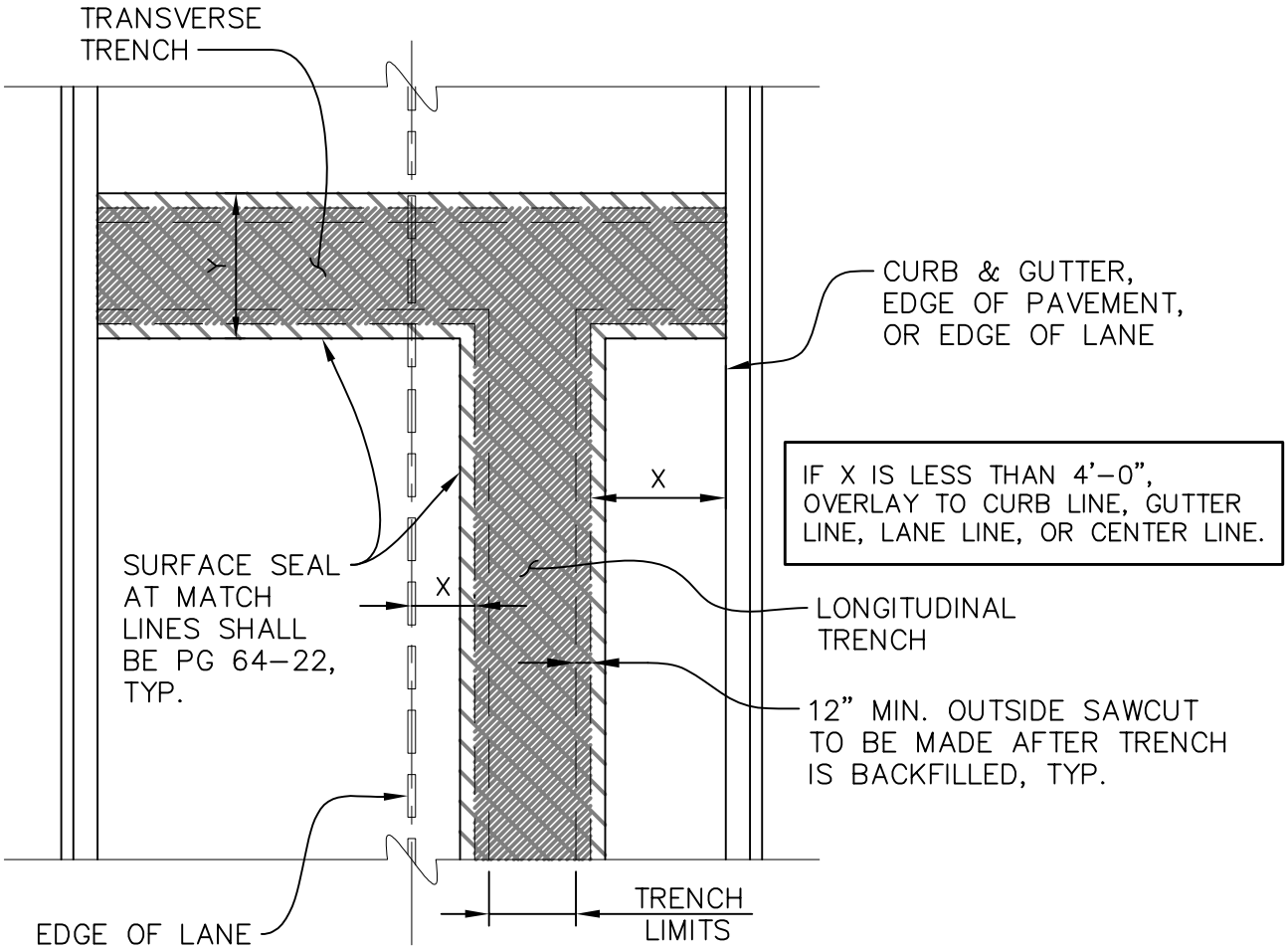


| TYPE OF STREET | Y |
|---|---|
| PRINCIPAL ARTERIAL | 50' |
| MINOR ARTERIAL | 40' |
| COLLECTOR | 30' |
| LOCAL | 20' |

**LEGEND:**

GRIND & OVERLAY (2" MIN. DEPTH, 4' MIN. WIDTH)

FULL PAVEMENT DEPTH REPLACEMENT (SEE STD. DTL. T-01)

FULL DEPTH SAWCUT

**NOTES:**

1. ADDITIONAL RESTORATION OVERLAY MAY BE REQUIRED AS DIRECTED BY ENGINEER.
2. TRENCHES IN/ACROSS INTERSECTIONS SHALL BE RESTORED PER T-02A.
3. PAVEMENT SECTION SHALL MATCH EXISTING PAVEMENT THICKNESS AND GRADE, OR PER SECTION 10.05 OF THE DESIGN STANDARDS, WHICHEVER IS THICKER/STRONGER.
4. WHERE THE TRENCH CROSSES A CROSSWALK/PEDESTRIAN PATH AND THE TOTAL RESTORATION WIDTH EQUALS OR EXCEEDS HALF THE PEDESTRIAN PATH LENGTH, THE CONTRACTOR SHALL UPGRADE EXISTING CURB RAMPS THAT DO NOT MEET CURRENT ADA STANDARDS OR INSTALL NEW CURB RAMPS IF NOT PRESENT.

| APPROVED BY CITY ENGINEER: Jacob Sweeting | DATE: 2/9/2023 | CITY OF AUBURN WASHINGTON | EXISTING ROADWAY RESTORATION OF UTILITY TRENCHES |
|---|---|---|---|
| PUBLIC WORKS DEPARTMENT | | | STANDARD DETAIL: T-02.5 |

Plotted by: Craig Dobyns on 1/6/2022 File location: M:\Construction Standard Details\Current Working DWG\Traffic\STDETL-T-02.4

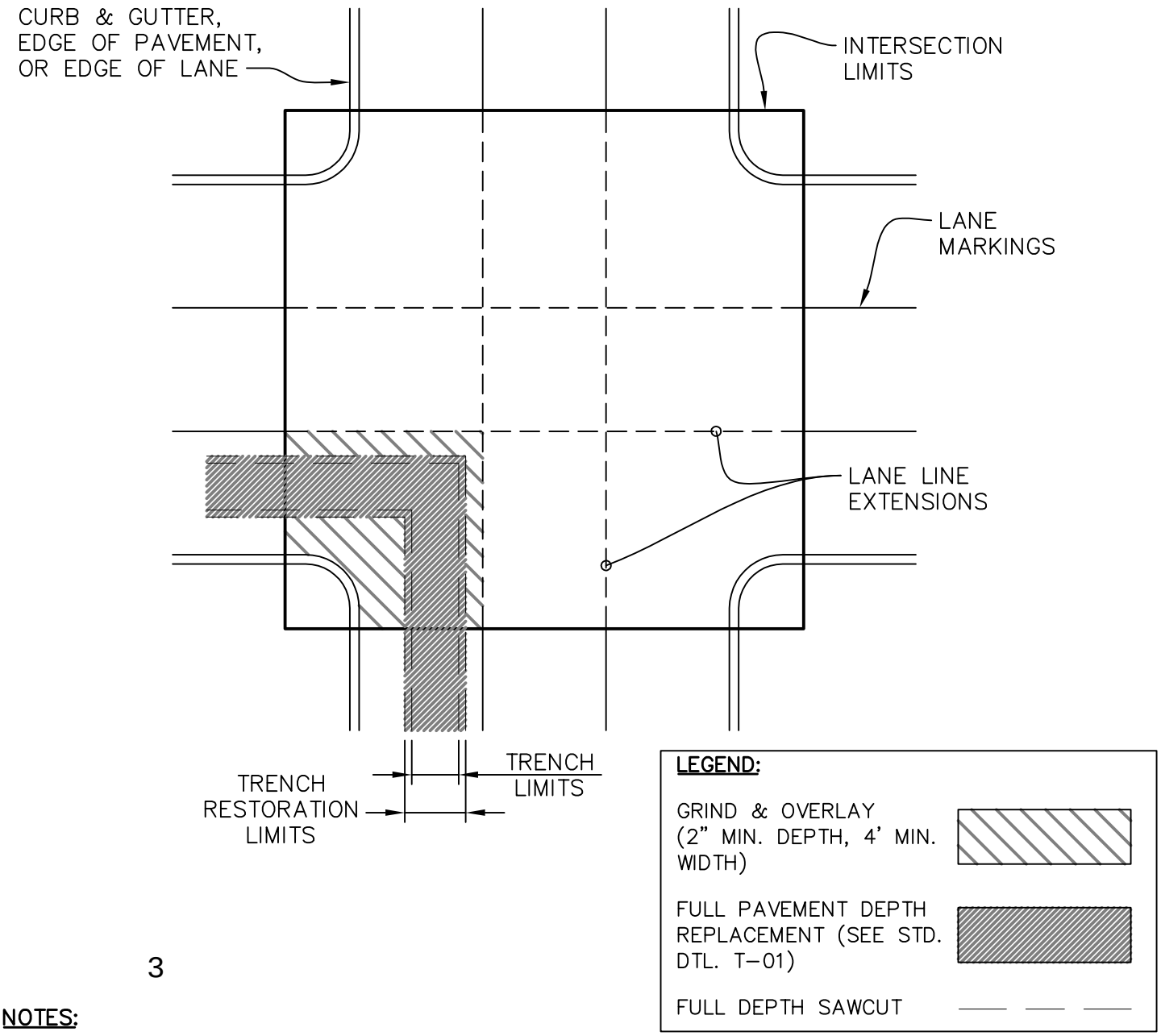


3

**NOTES:**

1. ADDITIONAL RESTORATION OVERLAY MAY BE REQUIRED AS DIRECTED BY ENGINEER.
2. PAVEMENT SECTION SHALL MATCH EXISTING PAVEMENT THICKNESS AND GRADE, OR PER SECTION 10.05 OF THE DESIGN STANDARDS, WHICHEVER IS THICKER/STRONGER.
3. WHERE NO LANE MARKINGS EXIST, THE INTERSECTION SHALL BE BROKEN INTO FOUR QUADRANTS.
4. WHENEVER TRENCH RESTORATION LIMITS CROSS INTO LANE LINE EXTENSION SECTION(S) OR QUADRANTS(S), GRIND AND OVERLAY RESTORATION LIMITS SHALL INCLUDE THE FULL EXTENT OF EACH SECTION OR QUADRANT THE IMPROVEMENTS IMPACT.
5. WHERE THE TRENCH CROSSES A CROSSWALK/PEDESTRIAN PATH AND THE TOTAL RESTORATION WIDTH EQUALS OR EXCEEDS HALF THE PEDESTRIAN PATH LENGTH, THE CONTRACTOR SHALL UPGRADE EXISTING CURB RAMPS THAT DO NOT MEET CURRENT ADA STANDARDS OR INSTALL NEW CURB RAMPS IF NOT PRESENT.
6. TRENCH BACKFILL SHALL CONFORM TO STD DETAIL T-01.

| APPROVED BY CITY ENGINEER: Jacob Jewett | DATE: 2/9/2023 | CITY OF AUBURN WASHINGTON | EXISTING ROADWAY RESTORATION OF UTILITY TRENCHES IN INTERSECTION |
|---|---|---|---|
| PUBLIC WORKS DEPARTMENT | | | STANDARD DETAIL: T-02A.3 |

Plotted by: Craig Dobyns on 1/6/2022 File location: M:\Construction Standard Details\Current Working DWG\Traffic\STDETL-T-02A.2

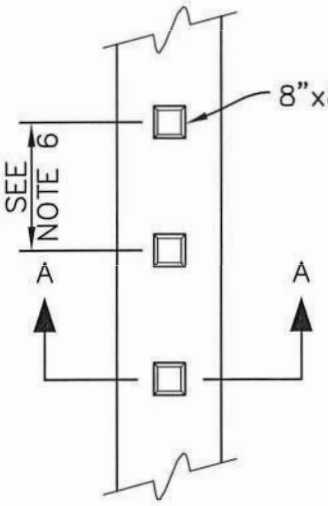


REMOVABLE BOLLARD
NOT TO SCALE

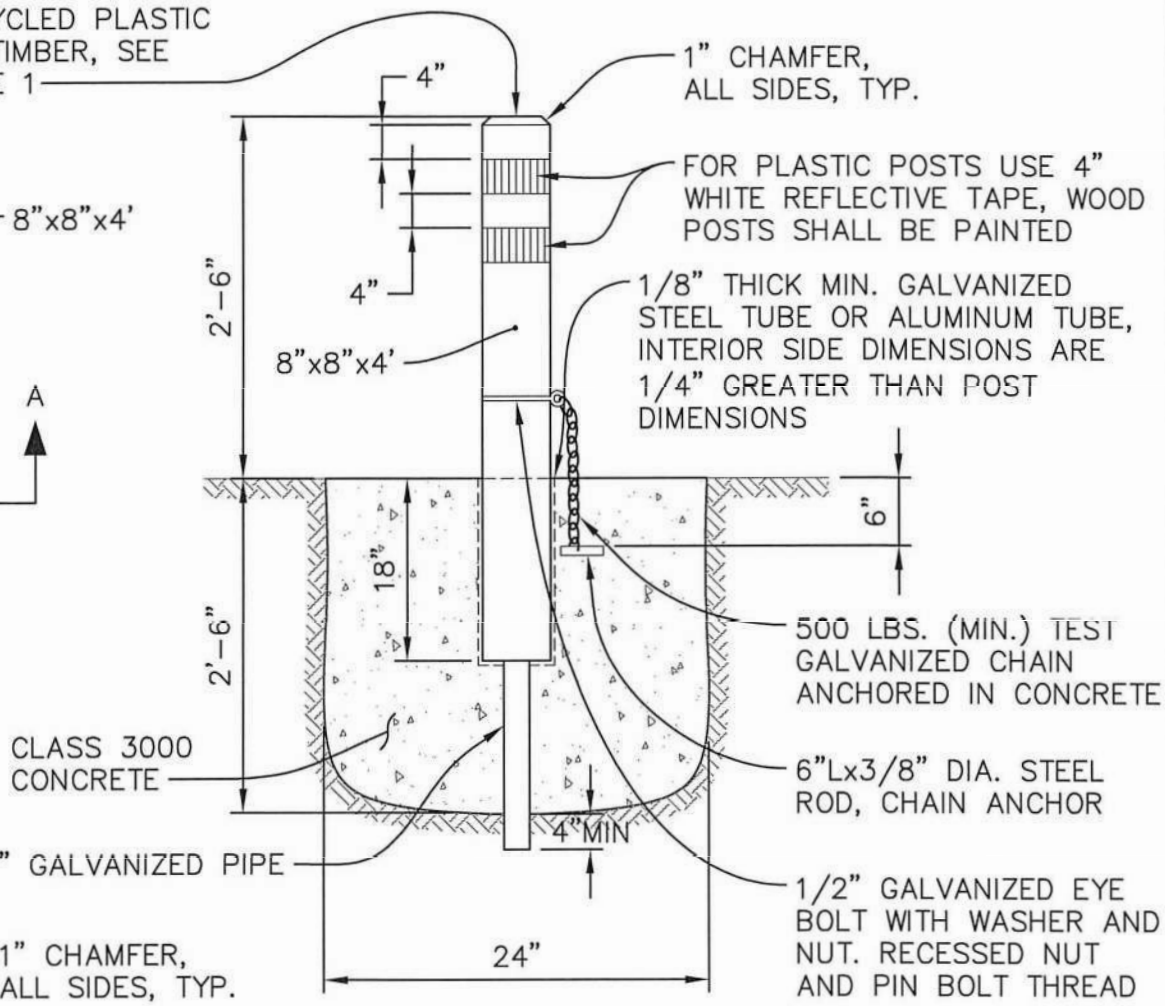


SECTION A–A
NOT TO SCALE

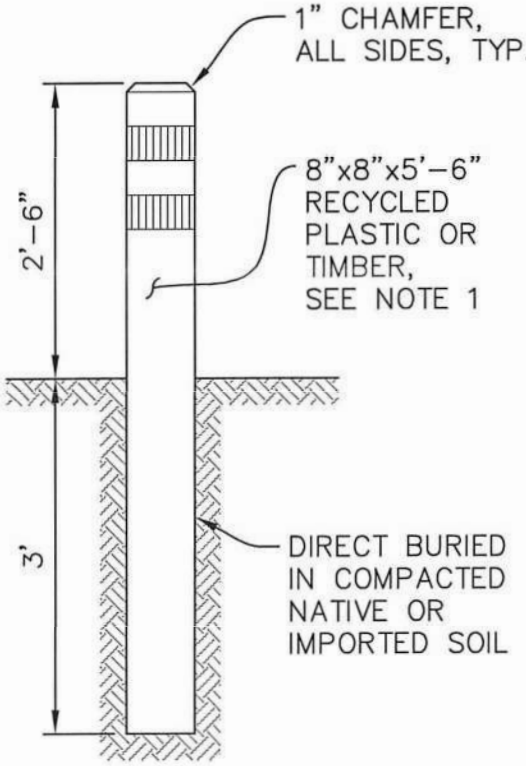


FIXED BOLLARD
NOT TO SCALE

**NOTES:**

1. RECYCLED PLASTIC BOLLARDS SHALL BE WHITE. TIMBER SHALL BE DOUGLAS FIR OF DENSE CONSTRUCTION GRADE, AND SHALL BE PRESSURE TREATED WITH WEATHER BORNE PRESERVATIVE (ACA, CCA, ACZA) IN ACCORDANCE WITH REQUIREMENTS OF SEC. 9–09.3(1) (GENERAL REQUIREMENTS) OF WSDOT STANDARD SPECIFICATIONS AND CITY'S AMENDMENTS THERETO. TOP 5" OF TIMBER SHALL BE PAINTED WHITE.
2. GALVANIZED STEEL TUBE SHALL CONFORM TO ASTM A53 GRADE A.
3. NUTS, BOLTS, & WASHERS SHALL CONFORM TO ASTM A307.
4. ALL STEEL PARTS SHALL BE GALVANIZED.
5. CEMENT CONCRETE SHALL BE CLASS 3000.
6. MINIMUM OF 5'–0" O.C. SPACING.
7. BOLLARD SHALL BE PLUMBED VERTICALLY IN ALL DIRECTIONS.

| APPROVED BY CITY ENGINEER: | DATE: | CITY OF AUBURN WASHINGTON | TYPICAL BOLLARD INSTALLATION |
|---|---|---|---|
| | 2/20/2018 | | |
| COMMUNITY DEVELOPMENT & PUBLIC WORKS DEPT. | | | STANDARD DETAIL: T–03.2 |

Plotted by: Craig Dobyne on 2/2/2018 File location: M:\Construction Standard Details\Current Working DWG\Traffic\STDETL-T-03.2

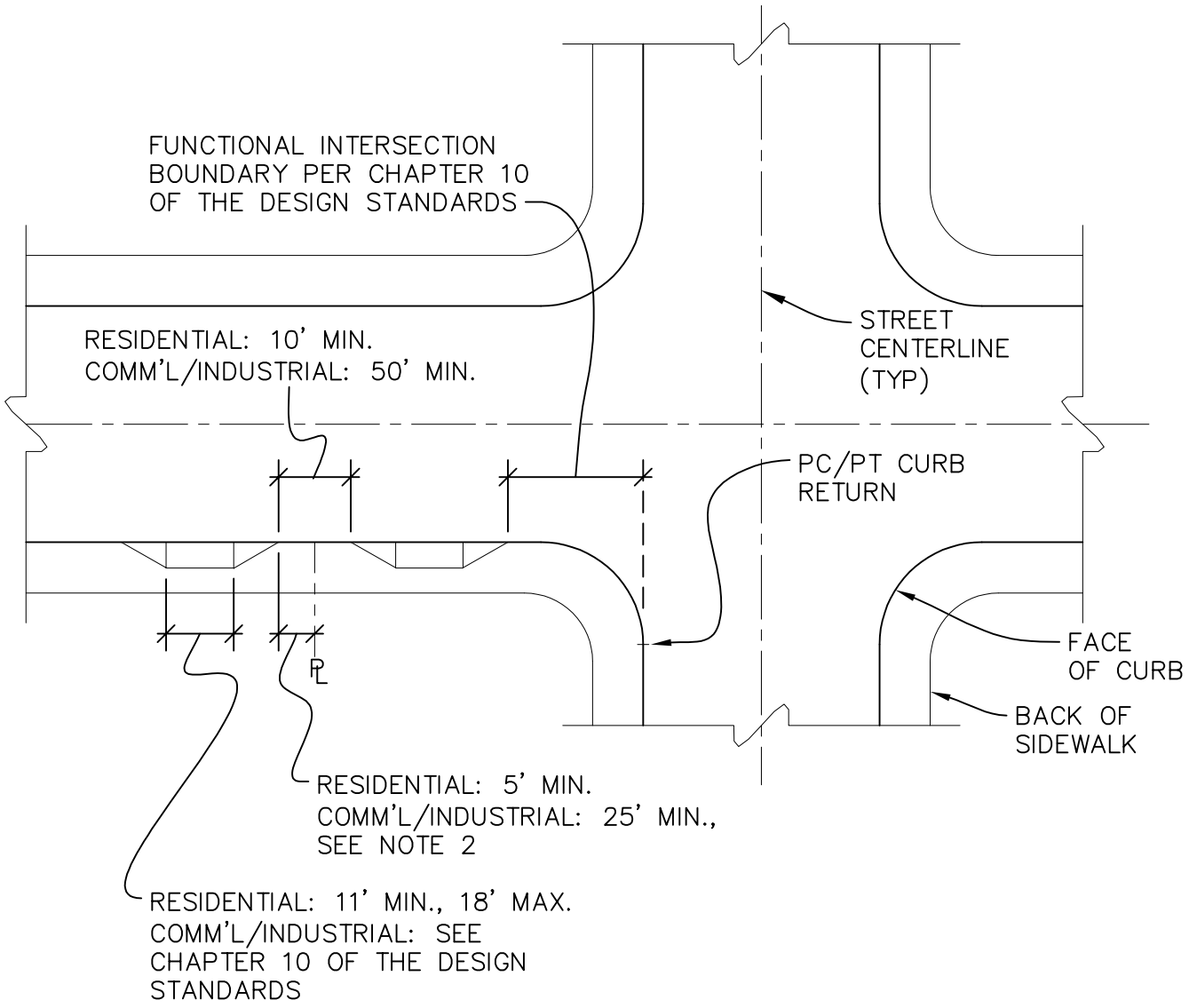


**NOTES:**

1. DRIVEWAY TO BE CONSTRUCTED PER STANDARD DETAIL T–34 OR T–35.
2. DOES NOT APPLY TO SHARED DRIVEWAYS IN ACCESS TRACTS/EASEMENTS AND EXISTING PANHANDLE/FLAG LOTS.

| APPROVED BY CITY ENGINEER: Jacob Sweeting | DATE: 3/1/2023 | CITY OF AUBURN WASHINGTON | DRIVEWAY WIDTHS AND LOCATION |
|---|---|---|---|
| PUBLIC WORKS DEPARTMENT | | | STANDARD DETAIL: T–04.6 |

Plotted by: Craig Dobyns on 2/20/2023 File location: M:\Construction Standard Details\Current Working DWG\Traffic\STDETL-T-04.6

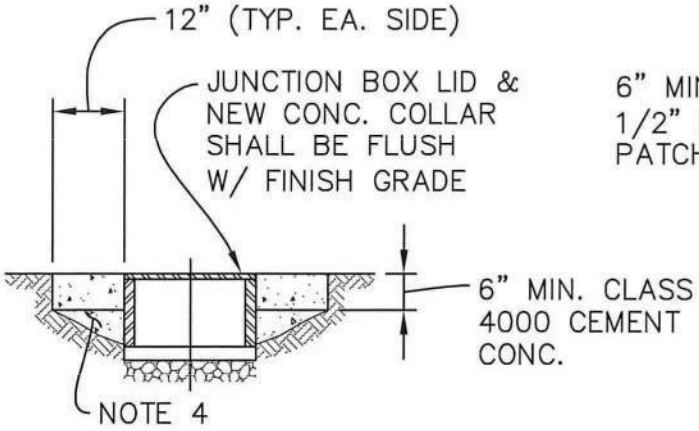


**JUNCTION BOX IN UNIMPROVED OR PARTIAL ASPHALT AREA**
NOT TO SCALE

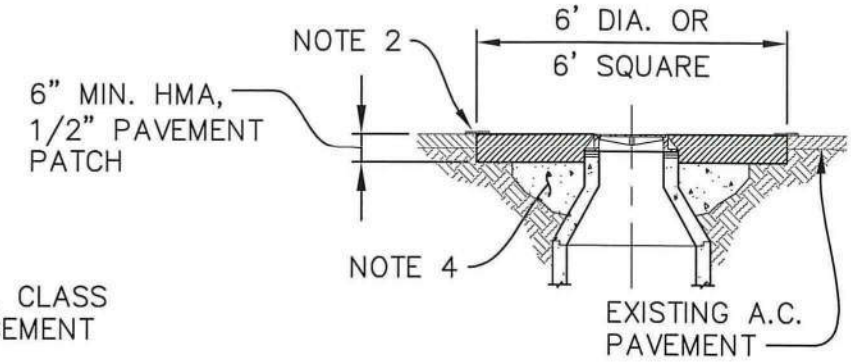


**MANHOLE (OR CB) IN ASPHALT AREA**
NOT TO SCALE

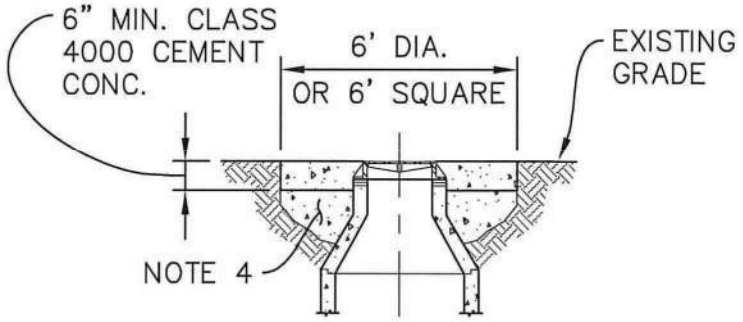


**MANHOLE OR CATCH BASIN IN UNIMPROVED AREA**
NOT TO SCALE

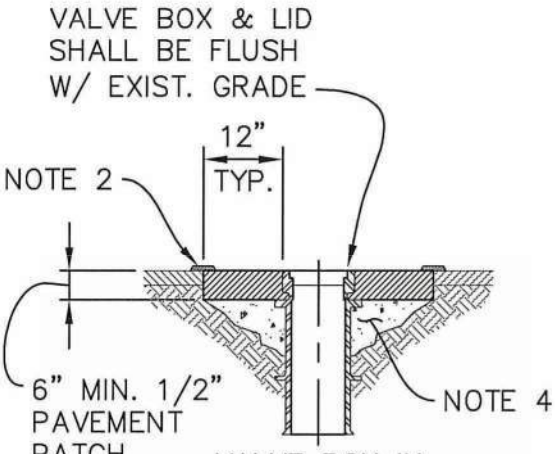


**VALVE BOX IN ASPHALT AREA**
NOT TO SCALE

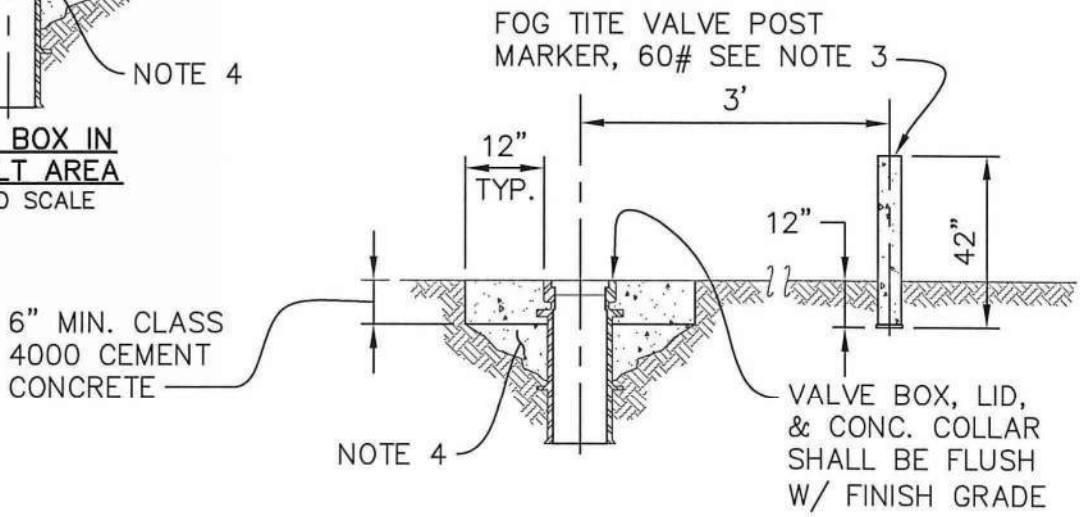


**VALVE BOX IN UNIMPROVED AREA**
NOT TO SCALE

**NOTES:**

1. ADJUSTMENT OF SANITARY SEWER AND STORM STRUCTURES SHALL BE PER SECTION 7-05.3(1). ADJUSTMENT OF WATER UTILITY STRUCTURES SHALL BE PER SECTION 7-12.3(2).
2. SURFACE SEAL AT MATCHLINE SHALL BE CSS-1 OR CSS-1H EMULSIFIED ASPHALT OR PG.
3. VALVE IN UNIMPROVED AREAS SHALL HAVE A VALVE POST MARKER.
4. FILL ANY VOIDS OR DISTURBED AREAS BELOW 6" WITH QUICK SETTING CEMENT CONCRETE, DEPTH AS REQUIRED.
5. RISER RING HEIGHT 2" MIN. 25" MAX. ANY ADJUSTMENT OVER 18" REQUIRES A HAND HOLD.

| APPROVED BY CITY ENGINEER: | DATE: 2/20/2018 | CITY OF AUBURN WASHINGTON | ADJUSTMENT OF NEW AND EXISTING UTILITY STRUCTURES TO FINISH GRADE |
|---|---|---|---|
| COMMUNITY DEVELOPMENT & PUBLIC WORKS DEPT. | | | STANDARD DETAIL: T-05.2 |

Plotted by: Craig Dobyns on 2/15/2018 File location: M:\Construction Standard Details\Current Working DWG\Traffic\STDETL-T-05.2

*TREE IN SIDEWALK, SQUARE MULCH AREA: A=5' B=5'
**TREE IN LANDSCAPE STRIP, CIRCULAR MULCH AREA: D=1' MIN., 2' MAX.

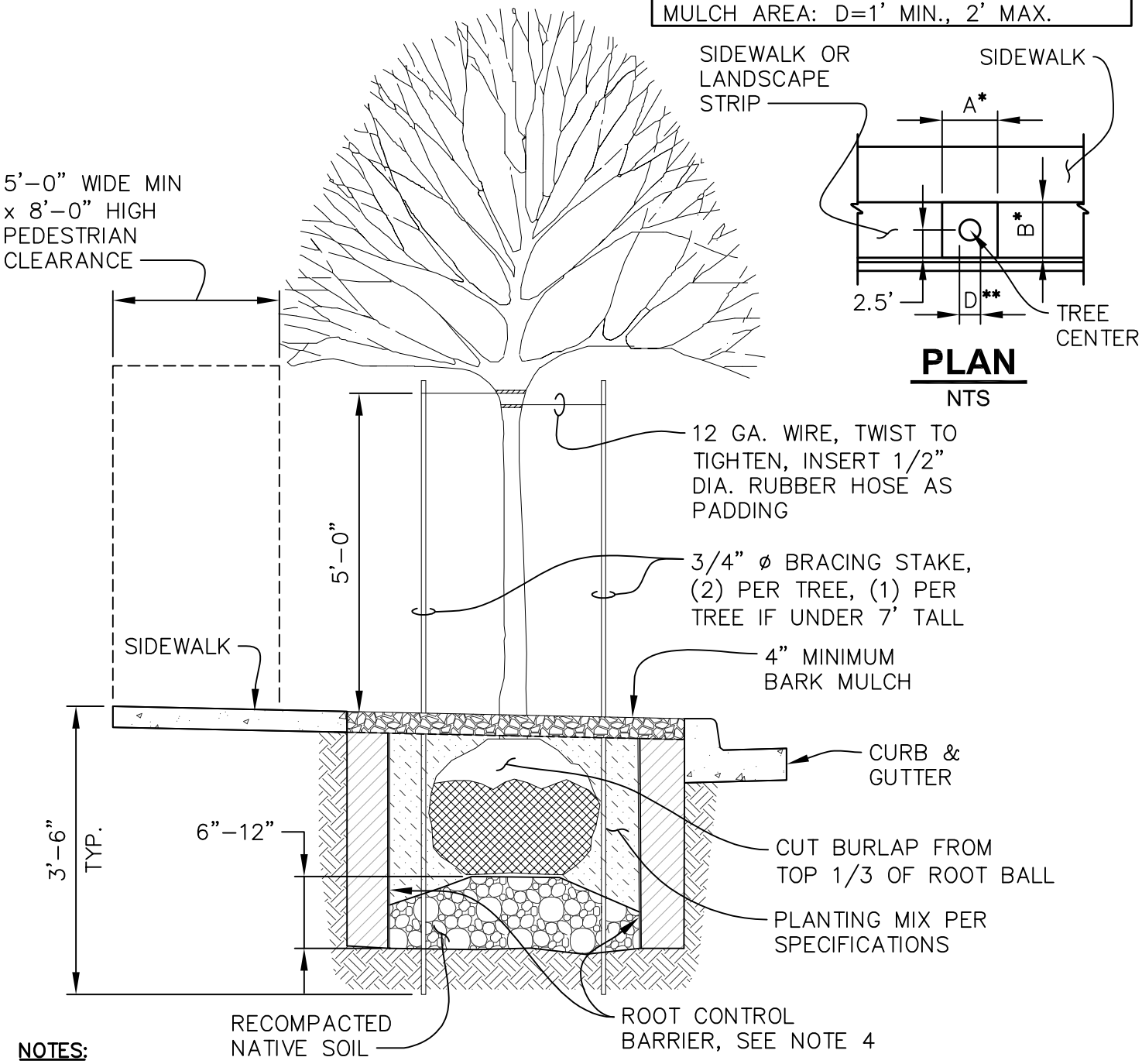


**NOTES:**

1. PLANT TREES 1" HIGHER THAN GROWN IN NURSERY.
2. TREE PIT SHALL NOT BE LESS THAN 2 TIMES THE ROOT BALL DIAMETER.
3. STREET TREES SHALL BE SELECTED FROM THE CITY APPROVED LIST OF STREET TREES.
4. INSTALL A MINIMUM 18" TO 24" DEEP ROOT CONTROL BARRIER AT GRADE TO AT LEAST 6" BELOW ROOT BALL. ROOT BARRIER MATERIAL SHALL BE PER SECTION 10 OF THE DESIGN STDS.
5. TREE SHALL HAVE MIN. 2" DIAMETER TRUNK AT 2' ABOVE ROOT BALL WHEN PLANTED.
6. STREET TREE IN SIDEWALK AREA MAY REQUIRE TREE GRATE PER STD DETAIL T-30 TO PROVIDE MIN. PEDESTRIAN CLEARANCE.

| APPROVED BY CITY ENGINEER: Jacob Greeting | DATE: 2/7/24 | CITY OF AUBURN WASHINGTON | STREET TREE DETAIL |
|---|---|---|---|
| PUBLIC WORKS DEPARTMENT | | | STANDARD DETAIL: T-06.6 |

Plotted by: Craig Dobyns on 1/12/2024 File location: M:\Construction Standard Details\Current Working DWG\Traffic\STDETL-T-06.6

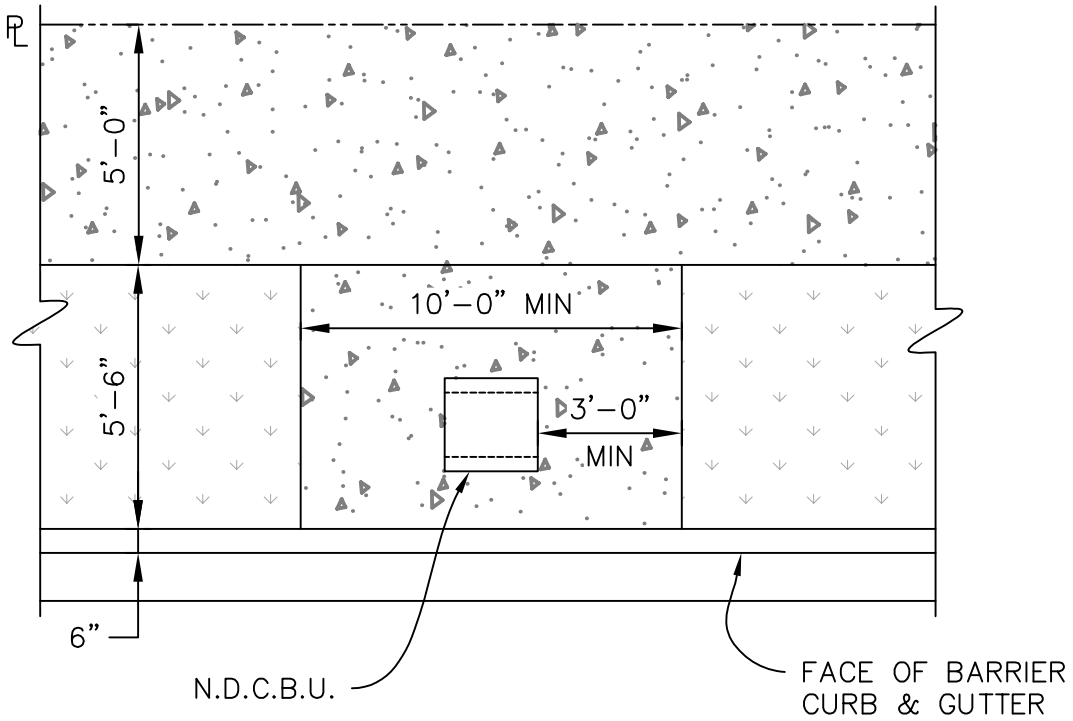


PLAN VIEW

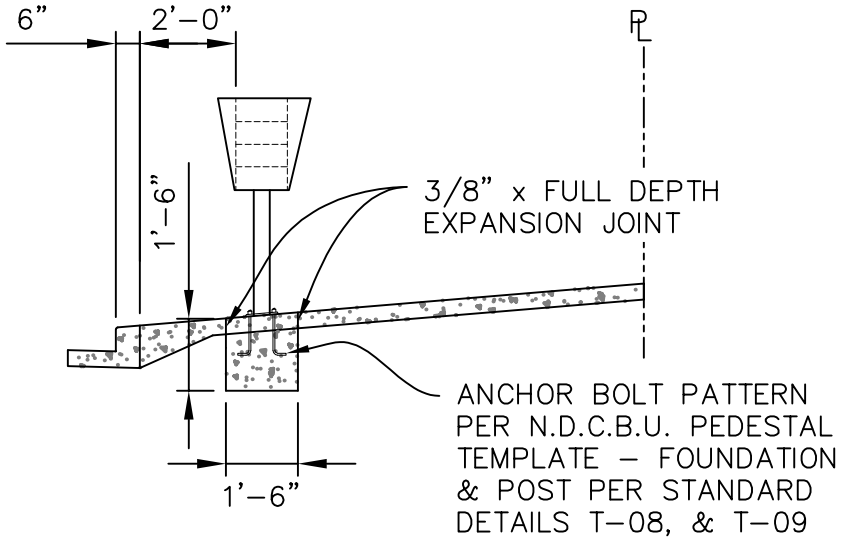


SIDE VIEW

**NOTE:**

MAILBOX LOCATIONS SHALL BE COORDINATED WITH THE SERVING POST OFFICE AND APPROVED BY THE CITY OF AUBURN.

| | | | |
|---|---|---|---|
| APPROVED BY CITY ENGINEER: Jacob Jewell | DATE: 1/17/2022 | CITY OF AUBURN WASHINGTON | NEIGHBORHOOD DELIVERY & COLLECTION BOX UNIT (N.D.C.B.U.) INSTALLATION |
| PUBLIC WORKS DEPARTMENT | | | STANDARD DETAIL: T-07.2 |

Plotted by: Craig Dobyns on 1/6/2022 File location: M:\Construction Standard Details\Current Working DWG\Traffic\STDETL-T-07.2

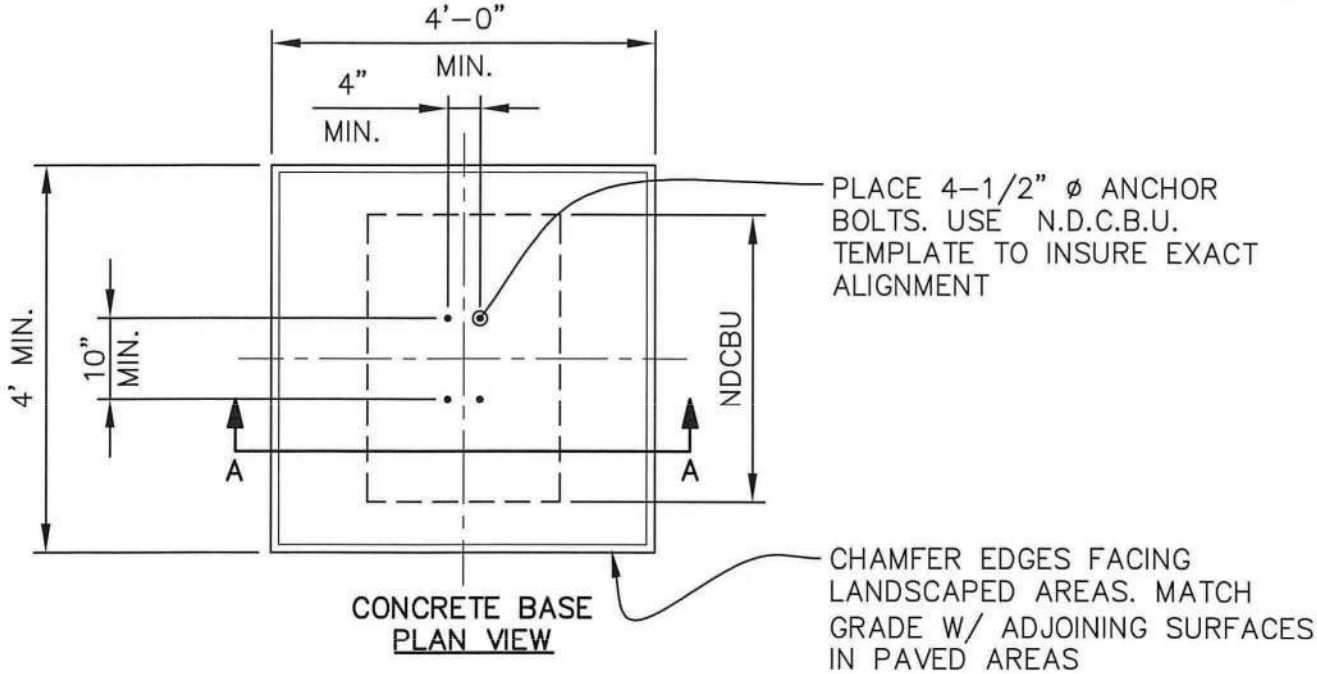


CONCRETE BASE
PLAN VIEW

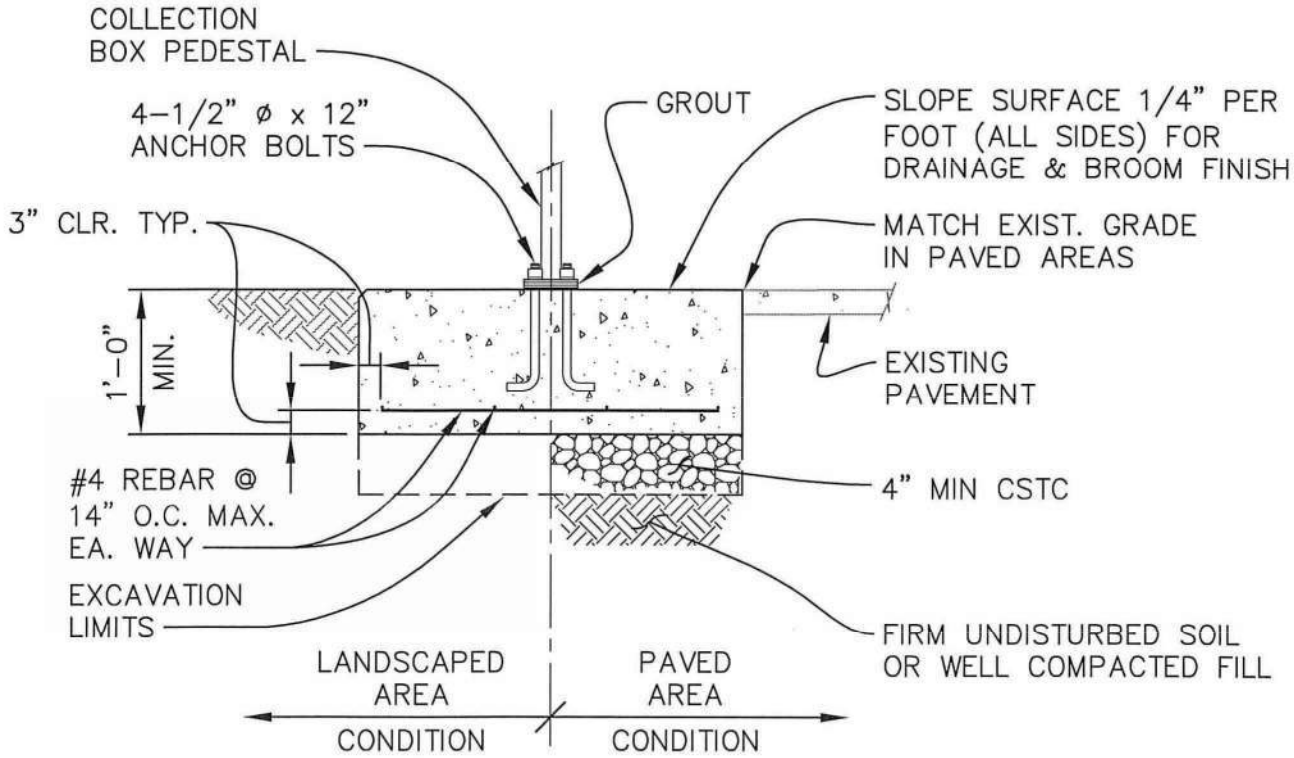


SECTION A-A

NOTES:

1. CONCRETE SHALL HAVE A COMPRESSIVE STRENGTH OF 3000 PSI AT 28 DAYS, CONTAIN 4% MIN. TO 6% MAX. AIR ENTRAINMENT AND BE PLACED WITH A 3-1/2" TO 4-1/2" SLUMP IN ACCORDANCE WITH ACI 301.
2. REINFORCING STEEL SHALL CONFORM TO ASTM A615, GRADE 40.
3. ANCHOR BOLTS SHALL CONFORM TO ASTM A307, GALVANIZED CARBON STEEL OR ASTM A193, B8M (316) STAINLESS STEEL.
4. GROUT SHALL BE NON-SHRINK, NON-METALLIC.

| APPROVED BY CITY ENGINEER: | DATE: | CITY OF AUBURN WASHINGTON | NEIGHBORHOOD DELIVERY & COLLECTION BOX UNIT (N.D.C.B.U.) SINGLE UNIT |
|---|---|---|---|
| | 2/20/2018 | | |
| COMMUNITY DEVELOPMENT & PUBLIC WORKS DEPT. | | | STANDARD DETAIL: T-08.2 |

Plotted by: Vlad Rubashka on 1/18/2018 File location: M:\Construction Standard Details\Current Working DWG\Traffic\STDETL-T-08.2

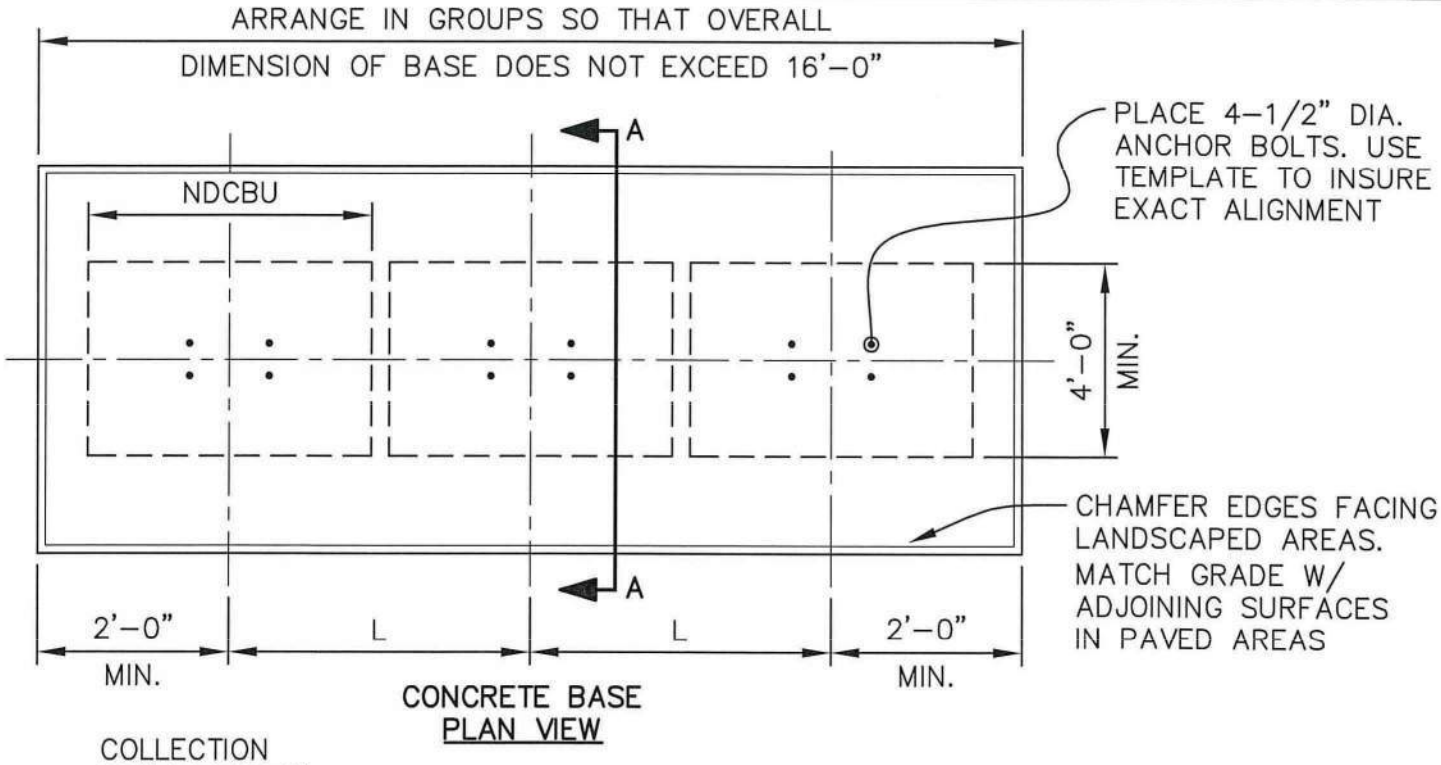


**CONCRETE BASE**
**PLAN VIEW**

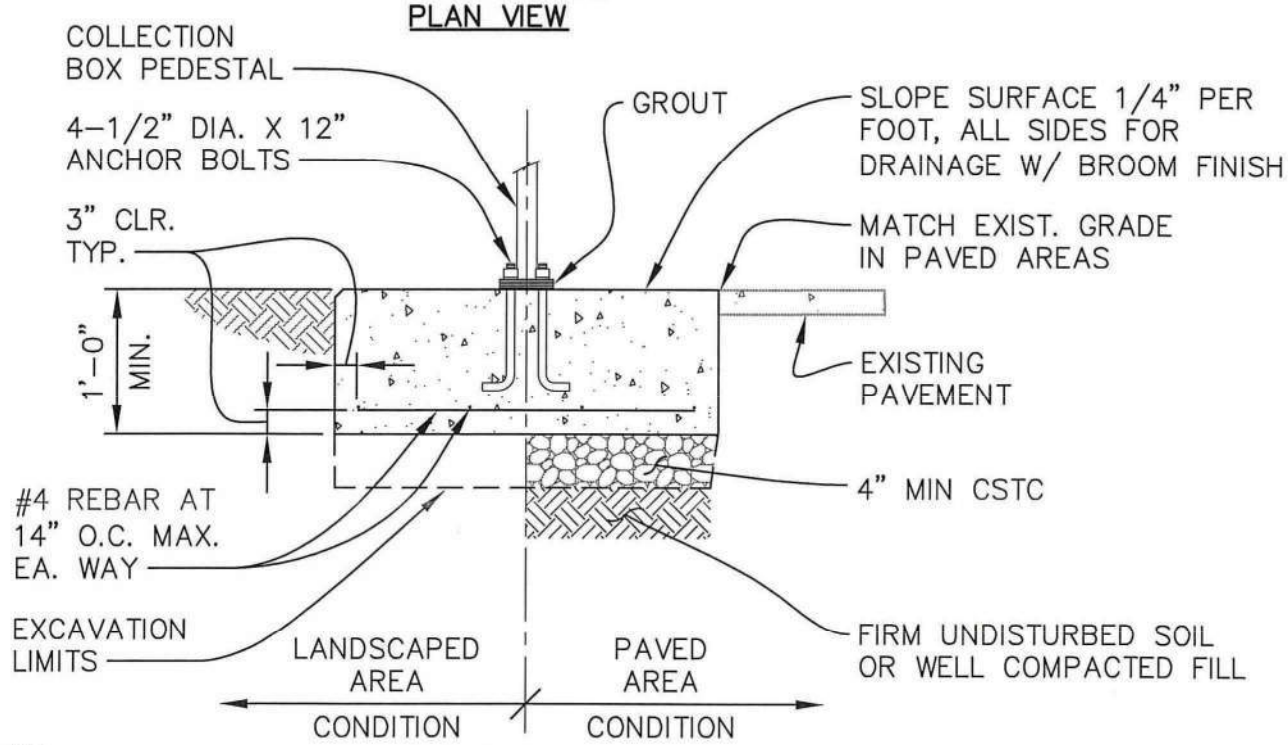


**SECTION A-A**

**NOTES:**

1. CONCRETE BASE DIMENSION "L" IS THE WIDTH OF NDCBU PLUS 2". FOUNDATION CAN BE EXTENDED BY LENGTH "L" TO ACCOMODATE ADDITIONAL UNITS.
2. CONCRETE SHALL HAVE A COMPRESSIVE STRENGTH OF 3000 PSI AT 28 DAYS, CONTAIN 4% MIN. TO 6% MAX. AIR ENTRAINMENT AND BE PLACED W/ A 3 1/2" TO 4 1/2" SLUMP IN ACCORDANCE W/ ACI 301.
3. REINFORCING STALL SHALL CONFORM TO ASTM A615, GRADE 40.
4. ANCHOR BOLTS SHALL CONFORM TO ASTM A307, GALVANIZED CARBON STEEL OR ASTM A193, B8M (316) STAINLESS STEEL.

| APPROVED BY CITY ENGINEER: | DATE: 2/20/2018 | CITY OF AUBURN WASHINGTON | NEIGHBORHOOD DELIVERY & COLLECTION BOX UNIT (N.D.C.B.U.) MULTIPLE UNITS |
|---|---|---|---|
| COMMUNITY DEVELOPMENT & PUBLIC WORKS DEPT. | | | STANDARD DETAIL: T-09.2 |

Plotted by: Vlad Rubashka on 1/18/2018 File location: M:\Construction Standard Details\Current Working DWG\Traffic\STDETL-T-09.2

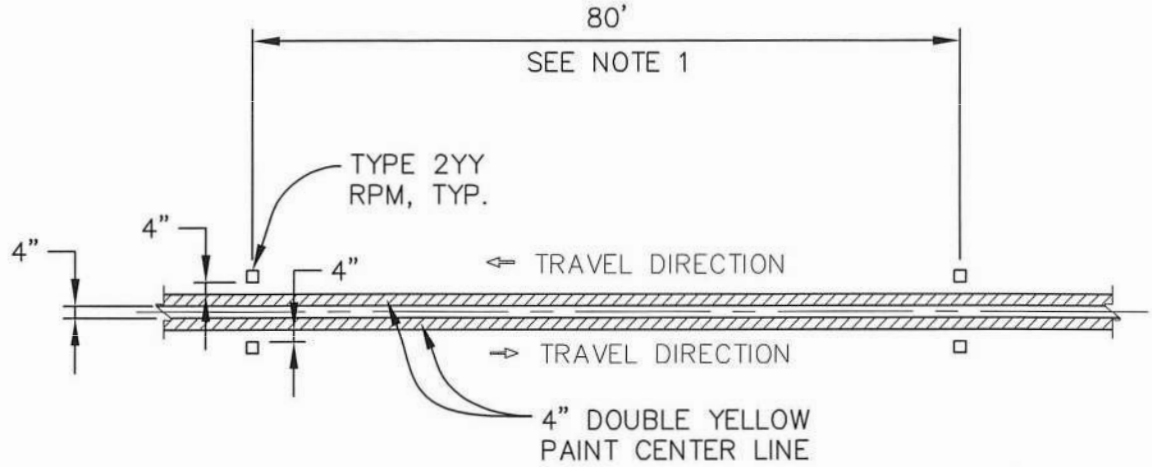


PLAN
DOUBLE CENTERLINE

NOTES:

1. RAISED PAVEMENT MARKERS SHALL BE SPACED AT 80' (FT.) INTERVALS ON TANGENTS AND ON HORIZONTAL CURVES W/ A RADIUS OF 1500' (FT.) OR MORE, AND 40' (FT.) INTERVALS ON HORIZONTAL CURVES HAVING RADII OF LESS THAN 1500' (FT.).

| | | | |
|---|---|---|---|
| APPROVED BY CITY ENGINEER: FOR Jacob Jewett | DATE: 10/14/16 | CITY OF AUBURN WASHINGTON | DOUBLE CENTERLINE WITH RAISED PAVEMENT MARKERS |
| COMMUNITY DEVELOPMENT & PUBLIC WORKS DEPT. | | | STANDARD DETAIL: T-12.1 |

Plotted by: Craig Dobyns on 9/12/2016 File location: M:\Construction Standard Details\Approved Drawing Files (dwg)\Traffic\STDETL-T-12.1

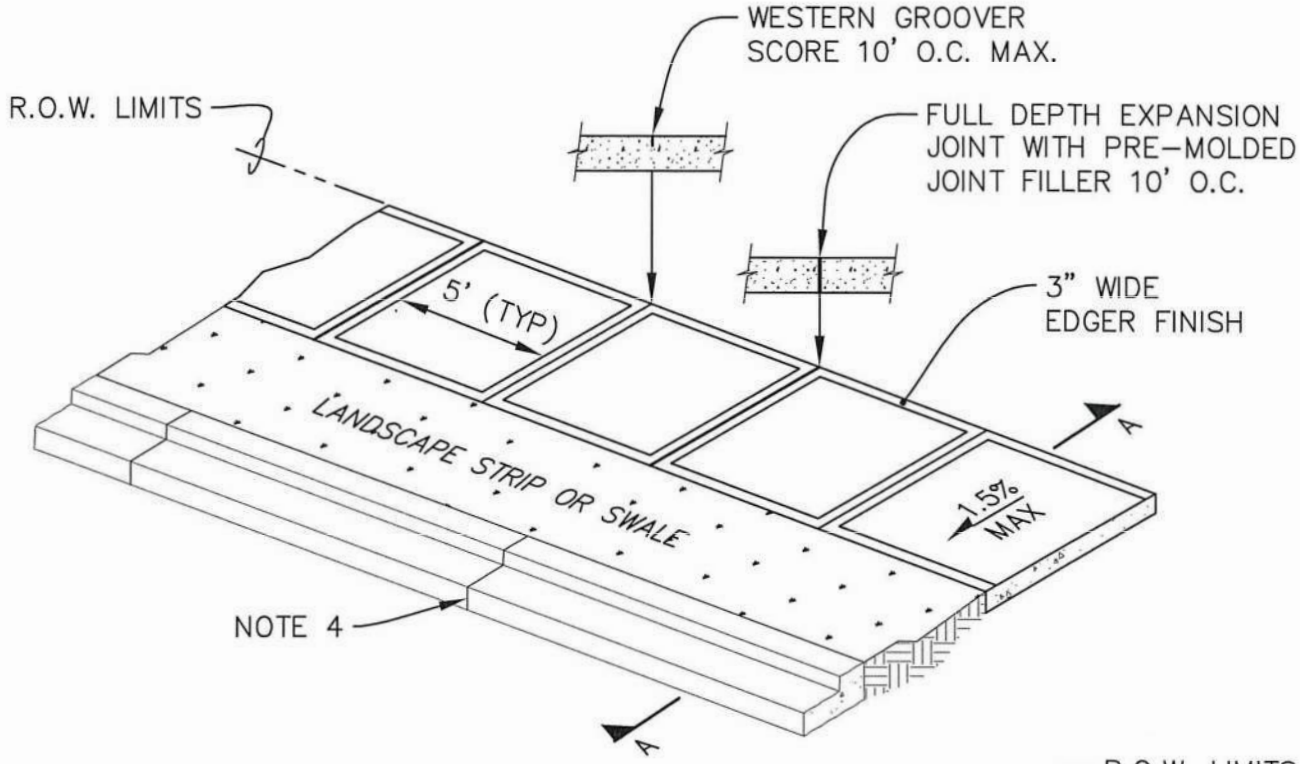


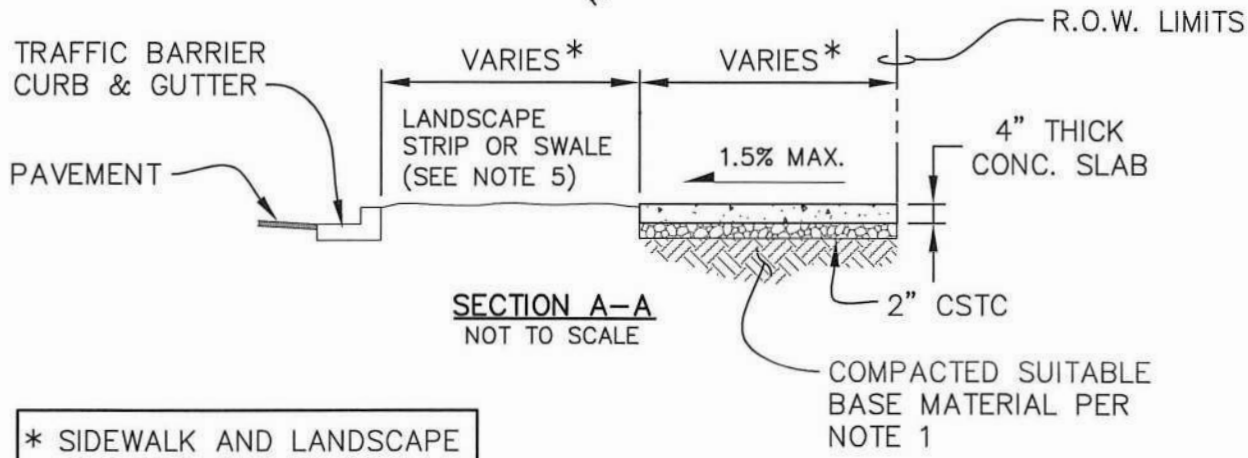


**SECTION A–A**
NOT TO SCALE

* SIDEWALK AND LANDSCAPE WIDTHS SHALL BE PER STREET CLASSIFICATION.

**NOTES:**

1. PLACE CEMENT CONCRETE ON COMPACTED SUITABLE BASE, AS PER SPECIFICATION SECTION 2–06.3 AND AS APPROVED BY THE ENGINEER.
2. CEMENT CONCRETE SHALL BE CLASS 3000 PER SPECIFICATION SECTION 6–02.3 WITH 5% AIR ENTRAINMENT.
3. INSPECTION REQUIRED FOR FORM AND SUB GRADE APPROVAL BEFORE POURING CONCRETE.
4. MATCH JOINTS ON SIDEWALK WITH JOINTS ON CURB OR AT 10' O.C.
5. LANDSCAPE STRIP SHALL GENERALLY BE GRADED TOWARDS THE CURB AT 1.5%. OTHER GRADES MAY BE ALLOWED WHERE IT CAN BE DEMONSTRATED TO NOT CAUSE DRAINAGE OR MAINTENANCE ISSUES.

| APPROVED BY CITY ENGINEER: | DATE: 2/20/2018 | CITY OF AUBURN WASHINGTON | CEMENT CONCRETE SIDEWALK WITH LANDSCAPE STRIP |
|---|---|---|---|
| COMMUNITY DEVELOPMENT & PUBLIC WORKS DEPT. | | | STANDARD DETAIL: T–13.2 |

Plotted by: Craig Dobyns on 2/2/2018 File location: M:\Construction Standard Details\Current Working DWG\Traffic\STDETL-T-13.2

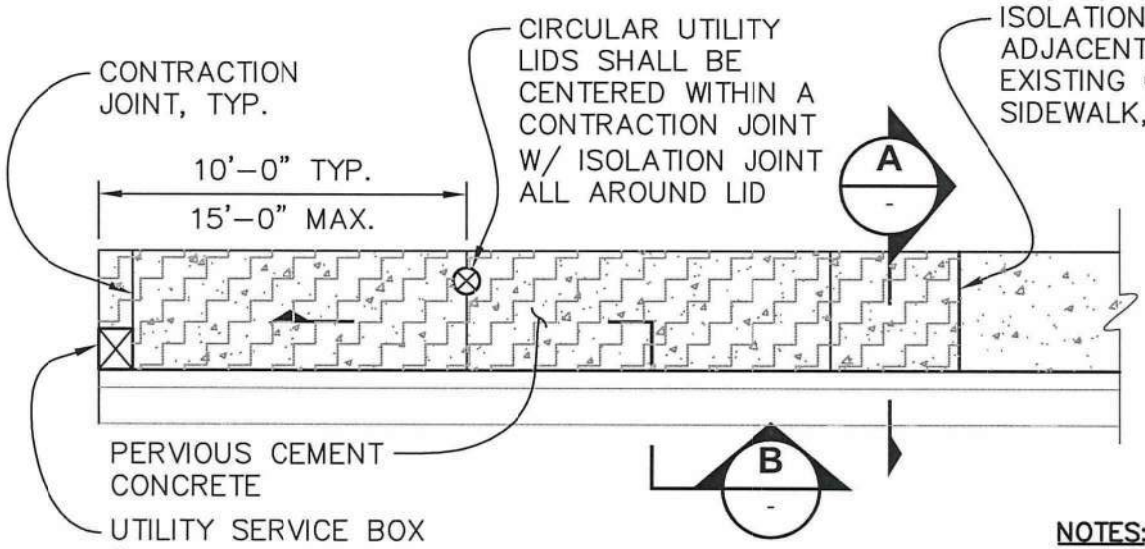


## PLAN

NTS

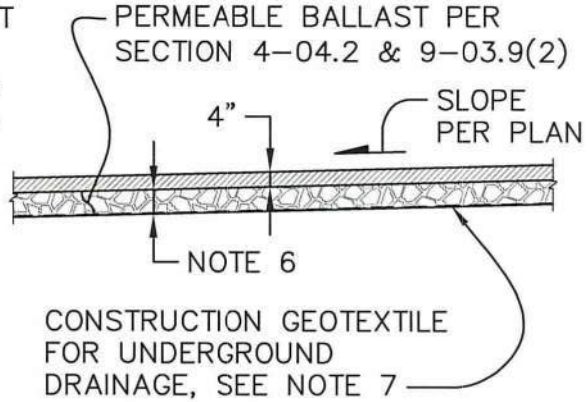


## SECTION B

NTS

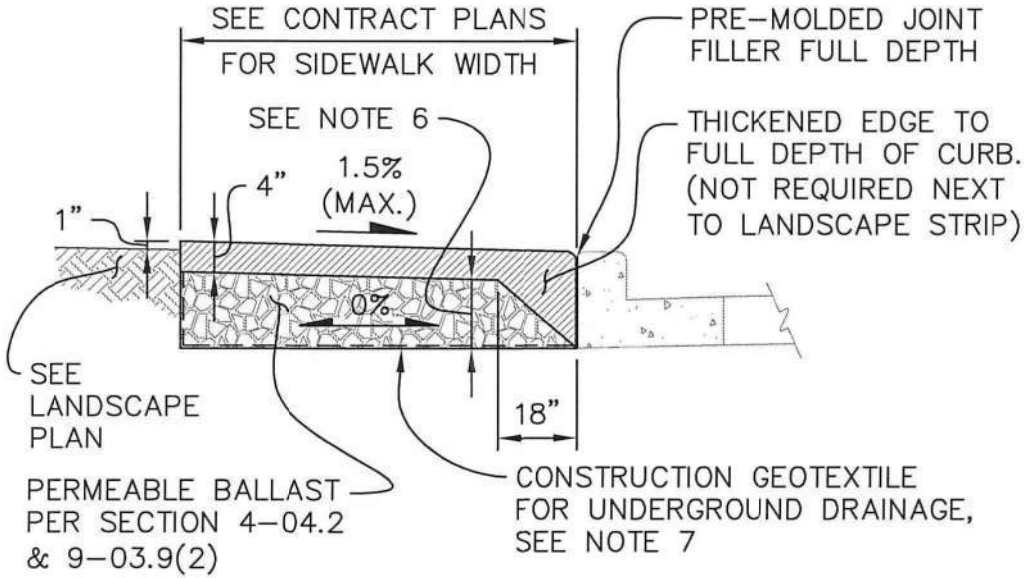


## SECTION A

NTS

**NOTES:**

1. ISOLATION JOINTS SHALL BE FULL DEPTH WITH 3/8" PREMOLDED JOINT FILLER.
2. CONTRACTION JOINTS SHALL HAVE A MINIMUM DEPTH OF 1/3 OF THE PERVIOUS CONCRETE THICKNESS AND 1/8" MAXIMUM WIDTH (UNLESS OTHERWISE APPROVED BY THE ENGINEER).
3. ALL JOINTS SHALL BE CLEAN & EDGED WITH A 1/2" RADIUS EDGER.
4. SUBGRADE PREPARATION SHALL BE IN ACCORDANCE WITH SECTION 2-06.3(3) (SUBGRADE FOR PERMEABLE PAVEMENTS). ALL SOFT & YIELDING FOUNDATION MATERIAL SHALL BE REMOVED & REPLACED WITH PERMEABLE BALLAST
5. FOR BALLAST DEEPER THAN CURB, PROVIDE A GEOMEMBRANE BARRIER BETWEEN PERMEABLE BALLAST & ROAD SECTION UNLESS ADJACENT ROAD IS PERMEABLE AS REQUIRED BY THE ENGINEER.
6. DEPTH OF PERMEABLE BALLAST VARIES. SEE SWMM FOR SPECIFIC REQUIREMENTS.
7. CONSTRUCTION GEOSYNTHETIC MAY BE REQUIRED BETWEEN NATIVE SOILS & PERMEABLE BALLAST IF DIRECTED BY THE ENGINEER. WHEN REQUIRED, THE GEOTEXTILE SHALL BE CLASS A, MODERATE SURVIVABILITY PER SECTION 9.33.2(1) TABLES 1 & 2 (UNLESS OTHERWISE APPROVED BY THE ENGINEER).

APPROVED BY CITY ENGINEER: [signature]

DATE: 8/5/2016

CITY OF AUBURN WASHINGTON

PERVIOUS CEMENT CONCRETE SIDEWALK

COMMUNITY DEVELOPMENT & PUBLIC WORKS DEPT.

STANDARD DETAIL: T-14.1

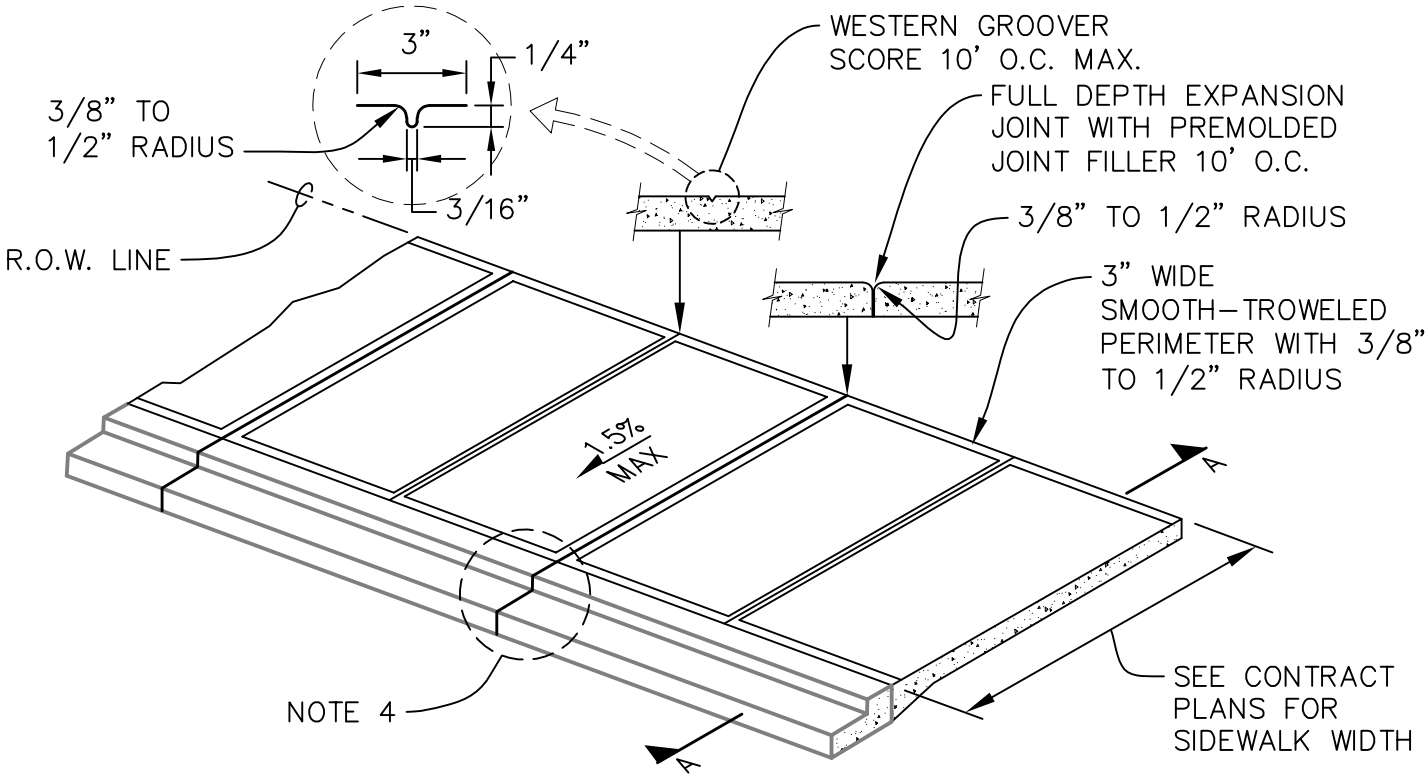


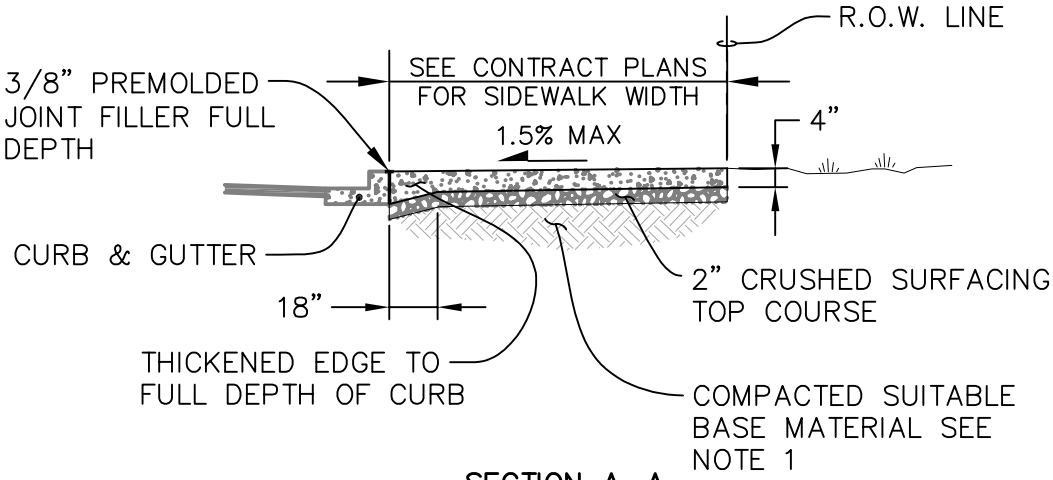


**SECTION A–A**
NOT TO SCALE

**NOTES:**

1. PLACE CEMENT CONCRETE ON COMPACTED SUITABLE BASE, AS PER SPECIFICATION SECTION 2–06.3 AND AS APPROVED BY THE ENGINEER.
2. CEMENT CONCRETE SHALL BE CLASS 3000 PER SPECIFICATION SECTION 6–02.3.
3. INSPECTION REQUIRED FOR FORM AND SUB GRADE APPROVAL BEFORE POURING CONCRETE.
4. MATCH EXPANSION JOINTS ON SIDEWALK WITH EXPANSION JOINTS ON CURB OR AT 10' O.C.

| APPROVED BY CITY ENGINEER: Jacob Freeding | DATE: 02/09/2023 | CITY OF AUBURN WASHINGTON | CEMENT CONCRETE SIDEWALK WITHOUT LANDSCAPE STRIP |
|---|---|---|---|
| PUBLIC WORKS DEPARTMENT | | | STANDARD DETAIL: T–15.2 |

Plotted by: Craig Dobyns on 2/8/2023 File location: M:\Construction Standard Details\Current Working DWG\Traffic\STDETL-T-15.2

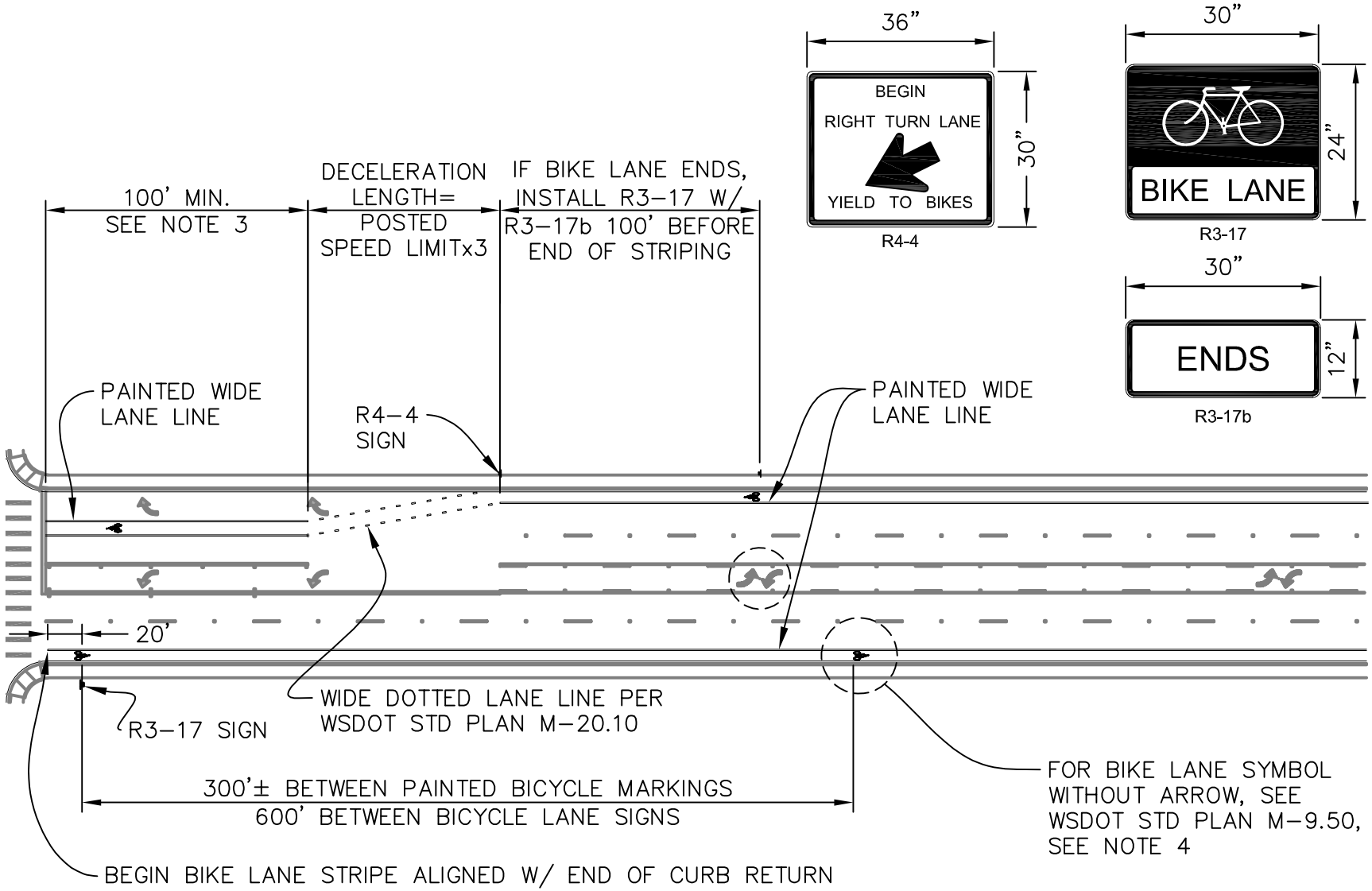


**NOTES:**

1. BIKE LANE WIDTH SHALL BE 6' WIDE, MINIMUM.
2. RIGHT TURN LANE LENGTH SHALL BE DETERMINED BY THE 95TH PERCENTILE OF THE QUEUE LENGTH VALUE.
3. LENGTH SHORTER THAN 100' MAY BE JUSTIFIED WITH TRAFFIC STUDIES.
4. BICYCLE RIDER SYMBOL DESIGNATING BICYCLE LANE SHALL BE INSTALLED WITH WHITE PAINT.

APPROVED BY CITY ENGINEER:

DATE: 1/17/2022

CITY OF AUBURN WASHINGTON

BICYCLE LANE MARKINGS

PUBLIC WORKS DEPARTMENT

STANDARD DETAIL: T-17.3

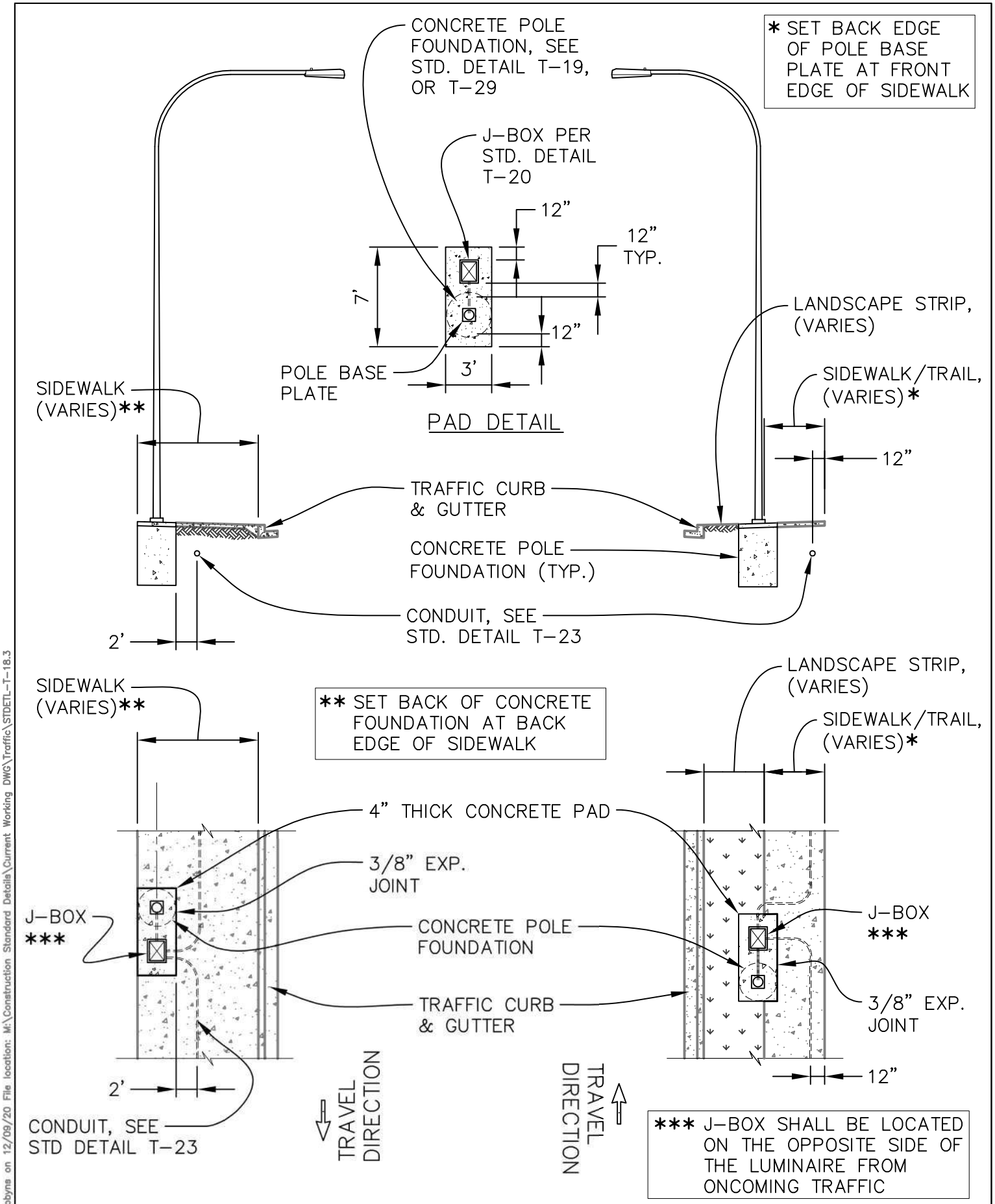


| | | | |
|---|---|---|---|
| APPROVED BY CITY ENGINEER: Jacob Sweeting | DATE: 01/05/2021 | CITY OF AUBURN WASHINGTON | LUMINAIRE AND CONDUIT LAYOUT DETAIL |
| PUBLIC WORKS DEPARTMENT | | | STANDARD DETAIL: T-18.3 |

Plotted by: Craig Dobyns on 12/09/20 File location: M:\Construction Standard Details\Current Working DWG\Traffic\STDETL-T-18.3

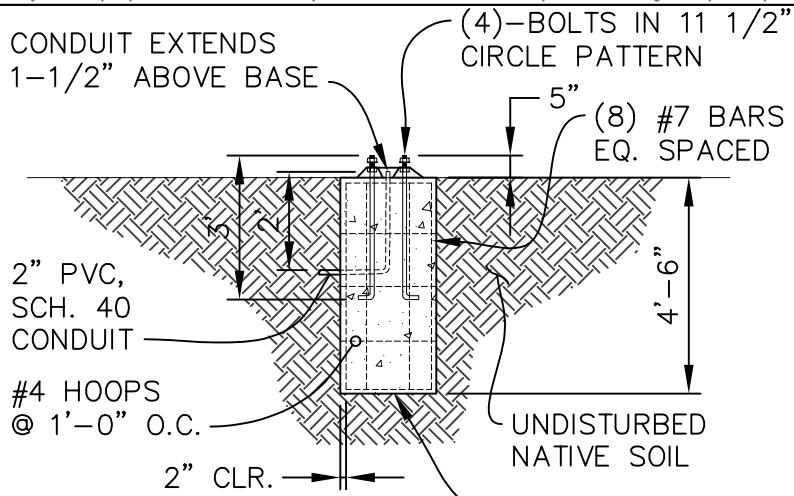


**SECTION A-A**
NOT TO SCALE

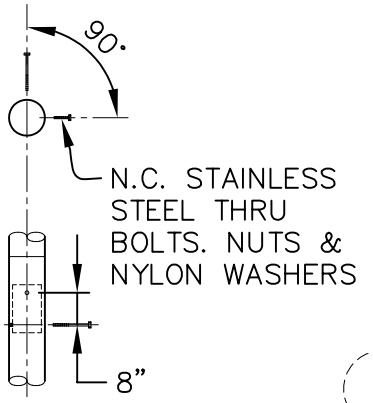


**DAVIT ARM ATTACHMENT**
NOT TO SCALE

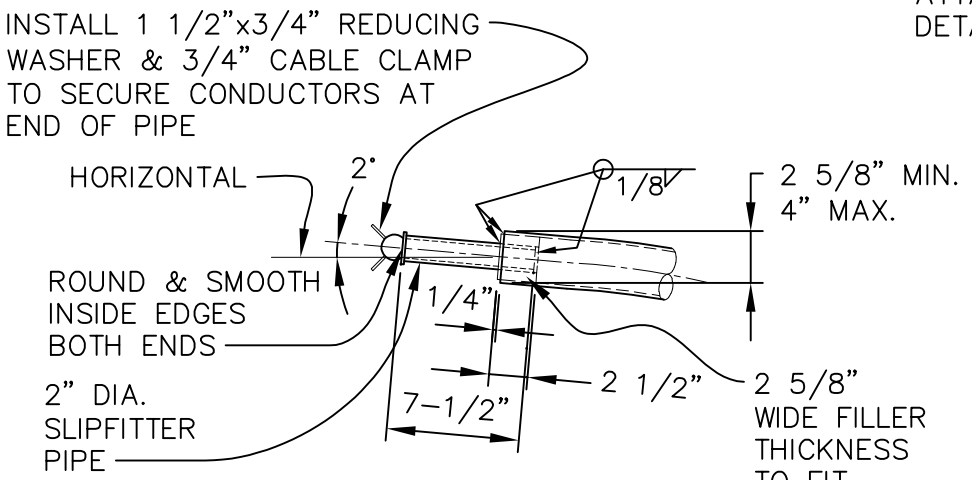


**DAVIT ARM END**
NOT TO SCALE

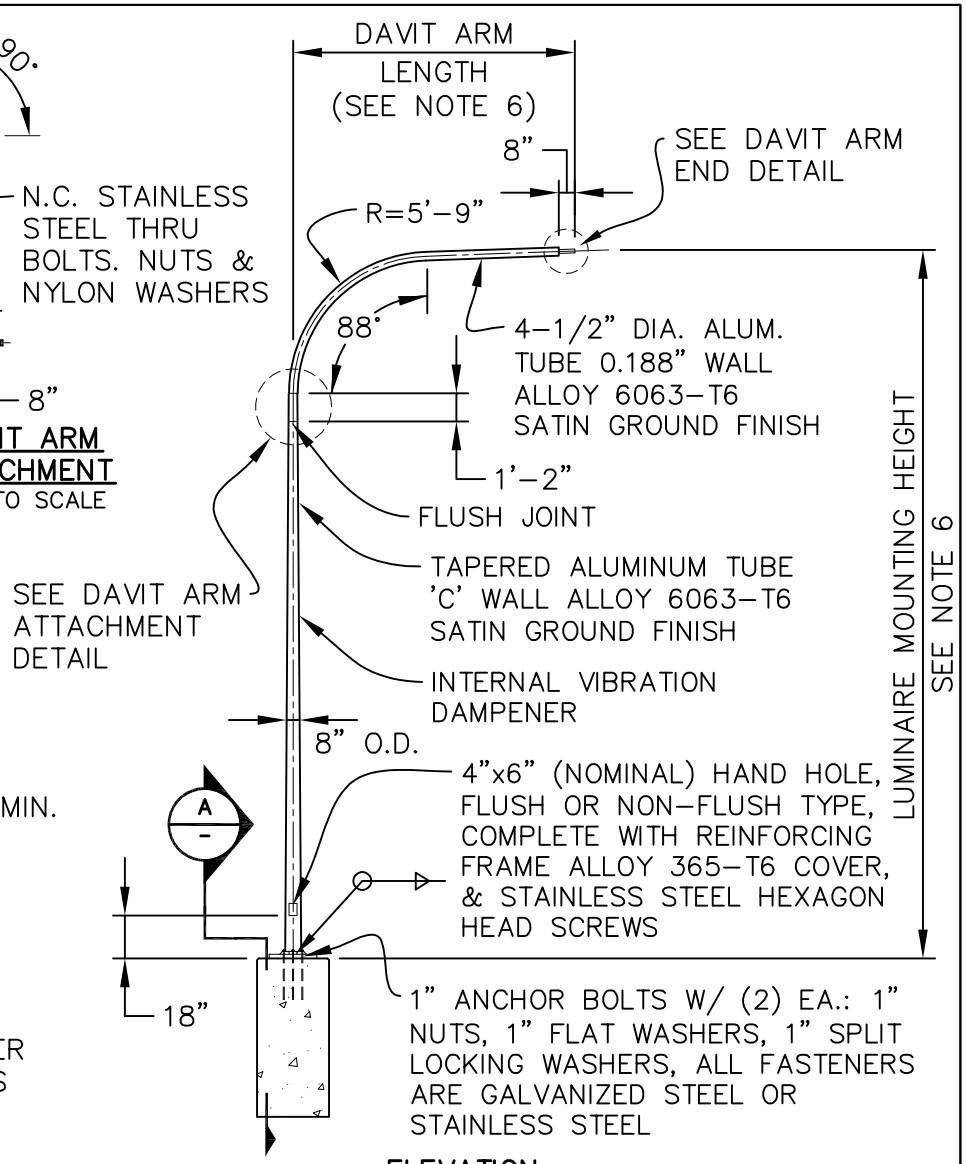


**ELEVATION**
NOT TO SCALE

**NOTES:**

1. POLE ASSEMBLIES DESIGNED TO SUPPORT MAXIMUM LUMINAIRE SIZE OF 1.5 SQ. FT. E.P.A. AND 60 LBS. IN A 100 MPH ISOTACH/130 MPH GUST VELOCITY WIND.
2. 4043 FILLER WIRE USED FOR WELDING.
3. ONLY THE BASE FLANGE WELDS ARE HEAT TREATED.
4. BASE FLANGE SHALL ACCOMMODATE 11" TO 12" BOLT CIRCLE.
5. 1"-8NC STEEL ANCHOR BOLT ASTM A576, AISI GRADE 1021-1046, 50,000 PSI=MIN. YIELD MEAN DIA. OF ROD STOCK 0.908± 0.011", OUT OF ROUND TOLERANCE: ± 0.012" ROLLED OR CUT THREADS PER A307, CLASS 2A, TOP 10" GALV. PER ASTM A153 COMPLETE WITH (8) 1" 8NC GALV. STL. HEX NUTS & (8) 1" GALV. STL. FLAT WASHERS.
6. SEE SECTION 10 OF THE DESIGN STANDARDS.
7. SEE STD. DETAIL T-18 FOR POLE, CONDUIT, AND FOUNDATION PLACEMENT.

PUBLIC WORKS DEPARTMENT

APPROVED BY CITY ENGINEER:

DATE: 2/7/24

CITY OF AUBURN WASHINGTON

LUMINAIRE POLE

STANDARD DETAIL: T-19.4

**NOTES:**

1. GRIND ALL 4 CORNERS AND EXPOSE TO BARE METAL.
2. FIELD WELD 2" BEAD AFTER APPROVAL OF WIRING INSPECTION BY THE ENGINEER.
3. SPRAY GALVANIZED PAINT TO ALL WELDS.
4. FOR JUNCTION BOX & LUMINAIRE LOCATION STD. DETAIL T-18.

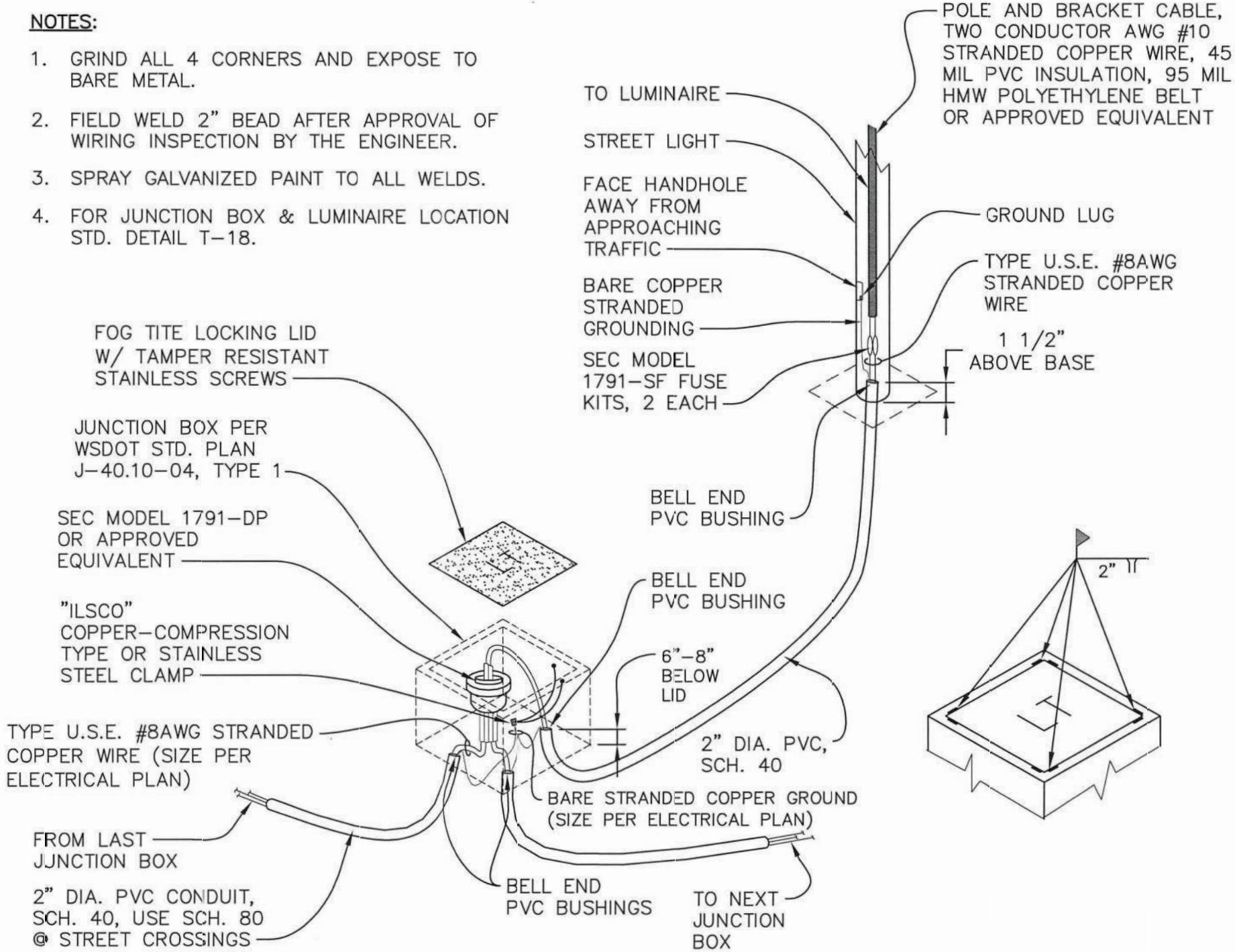


APPROVED BY CITY ENGINEER:

DATE: 2/20/2018

CITY OF AUBURN WASHINGTON

UNIFORM LUMINAIRE WIRING DETAIL

COMMUNITY DEVELOPMENT & PUBLIC WORKS DEPT.

STANDARD DETAIL: T-20.2

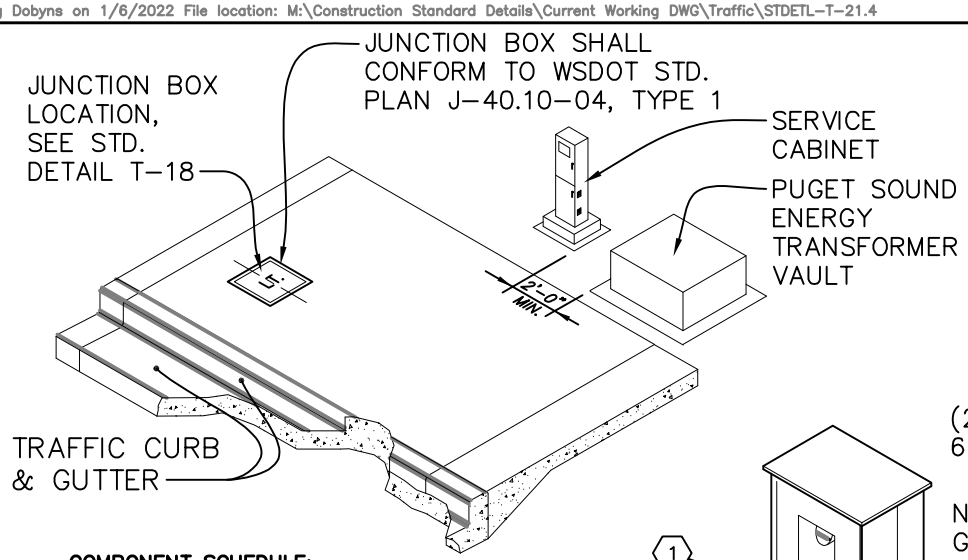


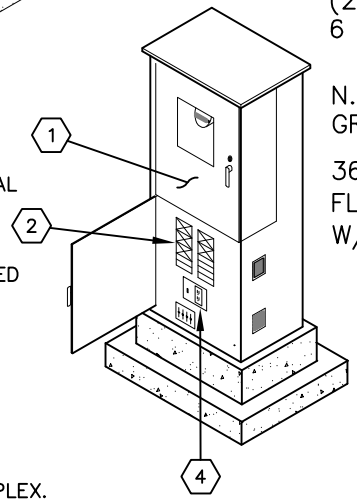


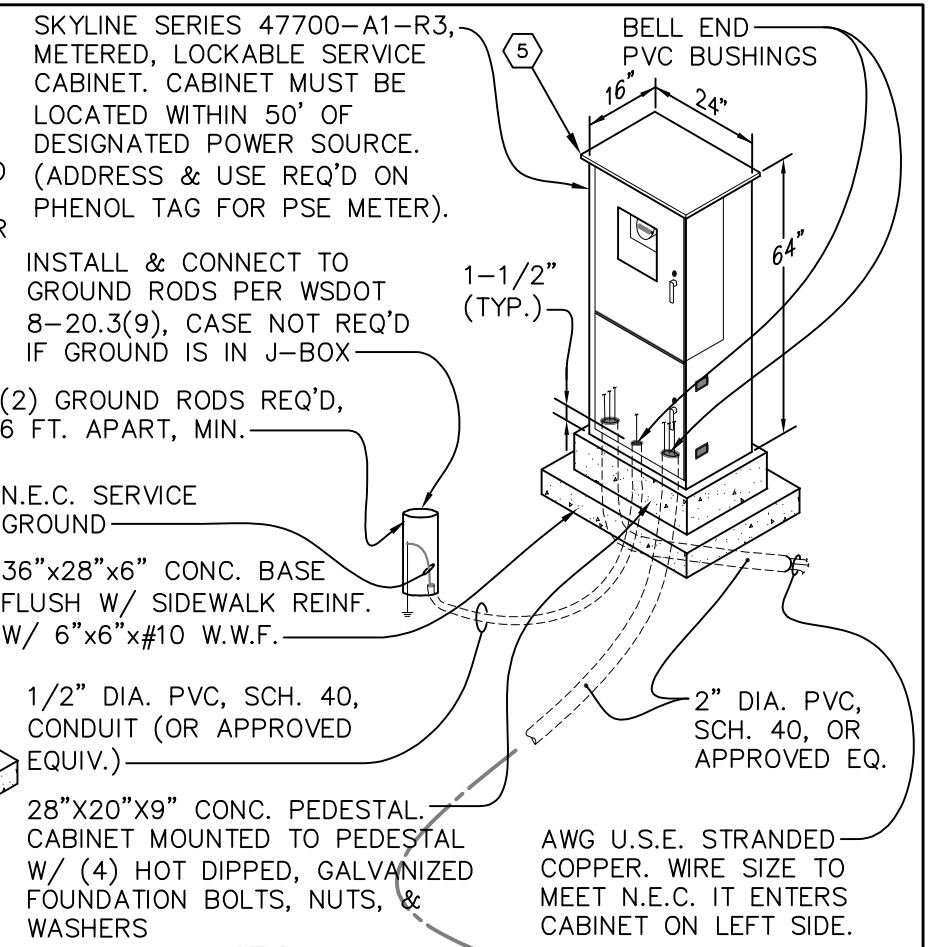


**COMPONENT SCHEDULE:**

(1) METERBASE: 100 AMP, 4 JAW, B-LINE U264, MANUAL BYPASS TYPE, W/ 5th JAW AT 9:00 POSITION, (CONTRACTOR TO VERIFY W/ SERVING UTILITY).

(2) PANELBOARD: 120/240 VAC, 100 AMP SILVER PLATED COPPER BUS, 1 PHASE, 3 WIRE, 12 CIRCUIT MAIN BREAKER: 100 AMP FRAME, 100 AMP TRIP, EATON #BAB2100 (BACK-FED) 10K AIC BOLT-ON BRANCH BREAKERS, EATON TYPE BAB

(2)-20/2 ILLUMINATION BRANCH A1 & B2

(1)-20/1 GROUND FAULT RECEPTACLE BRANCH

(4) GROUND FAULT RECEPTACLE: 20 AMP, 120 VAC DUPLEX.

(5) CABINET:

NEMA 3R, PADMOUNT, 1/8" ALUMINUM 5052-H32 CONSTRUCTION, DRIP HOOD, OPEN BOTTOM FRAMED W/ 2" ANGLE, 2-SCREENED & GASKETED VENTS.

DOORS: HEAVY DUTY WELDED HINGES, LIFT-OFF TYPE STAINLESS STEEL VAULT HANDLES W/ 3-POINT LATCH, PADLOCKABLE METERING DOOR. "BEST" CX LOCK W/ BLUE CORE ON DISTRIBUTION DOOR, CLOSED CELL NEOPRENE GASKET, 1/4" POLISHED WIRE GLASS METER VIEWING PORT.

FINISH: MILL FINISH ALUMINUM.

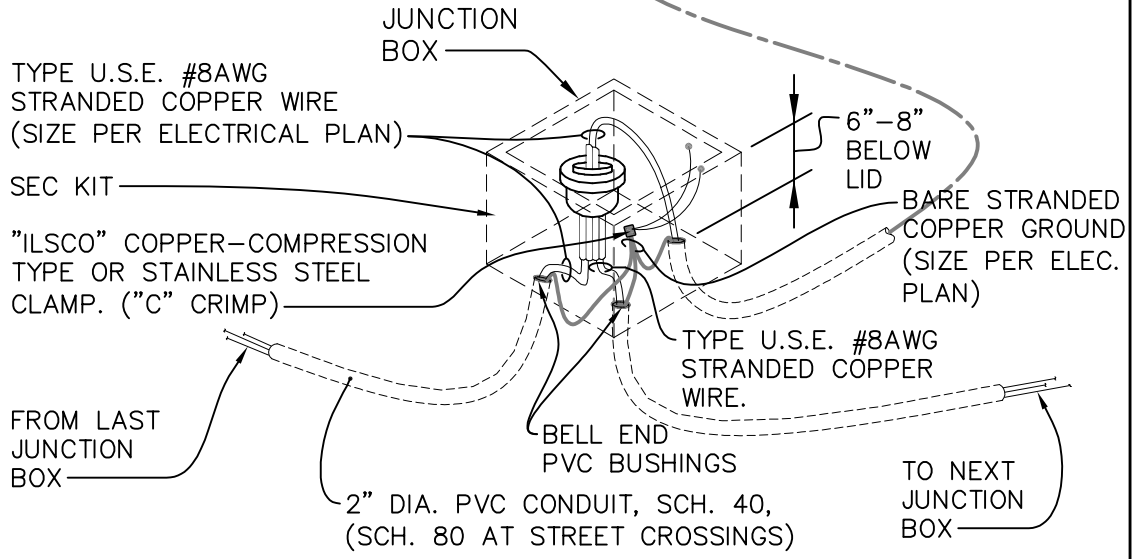


APPROVED BY CITY ENGINEER: Gary Lindsey

DATE: 1/17/2022

CITY OF AUBURN WASHINGTON

PUBLIC WORKS DEPARTMENT

POWER SERVICE CABINET DETAIL

STANDARD DETAIL: T-21.4

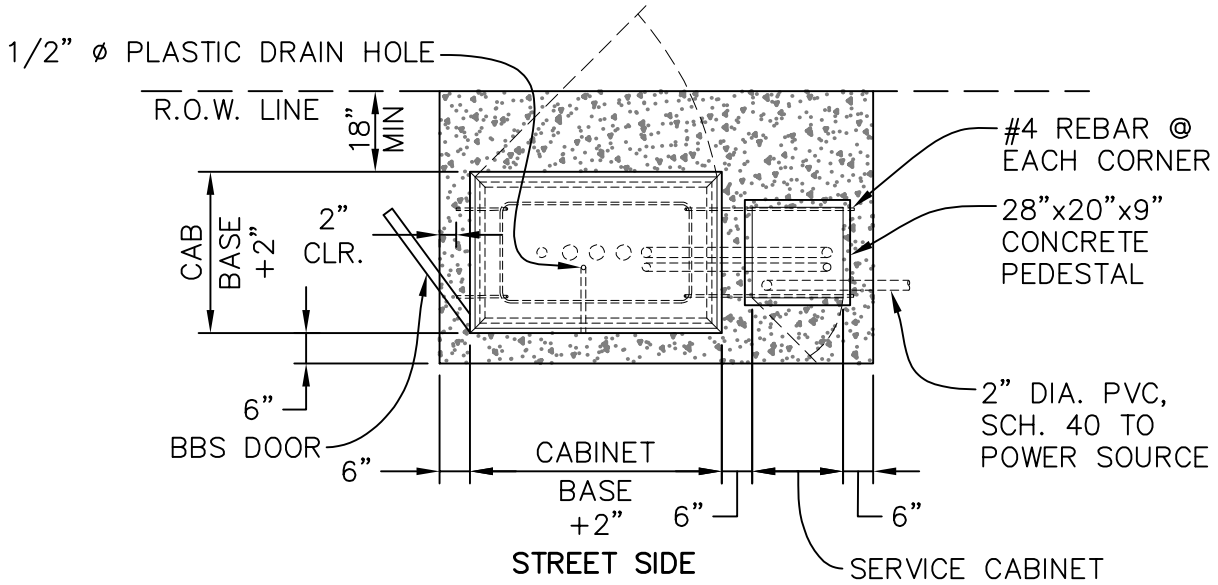


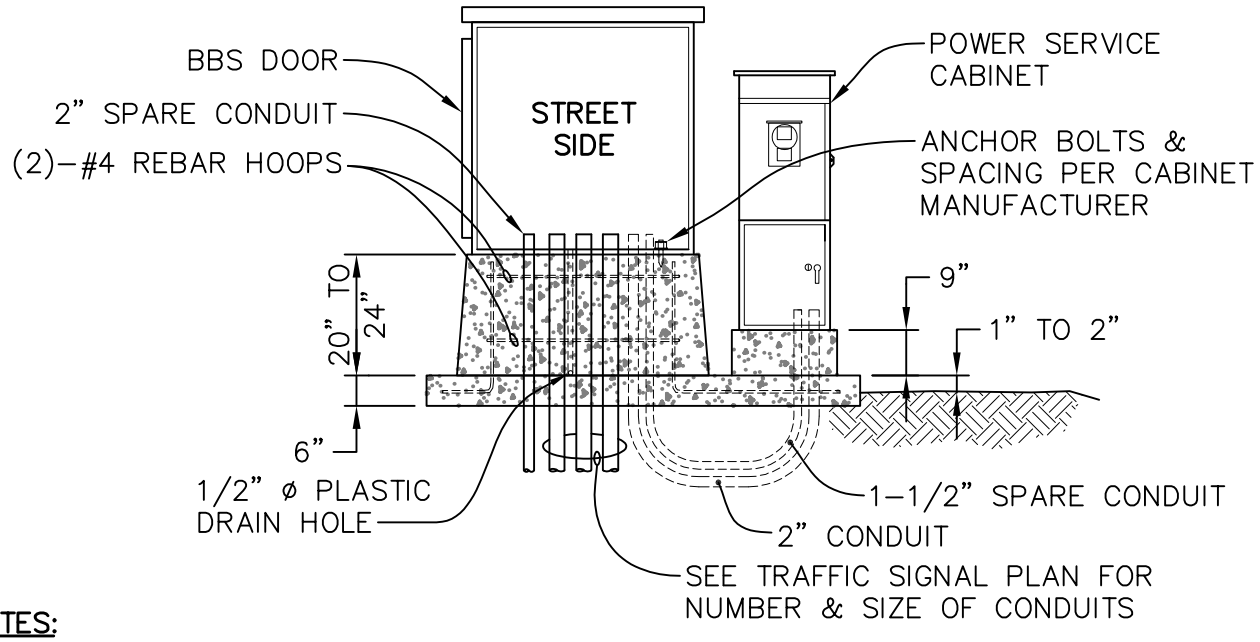


**NOTES:**

1. FOUNDATION SHALL BE CONSTRUCTED WITH CLASS 3000 CONCRETE WITH 3/4" CHAMFERED EDGE ON THE LOWER PAD.
2. CONDUITS SHALL BE EXTENDED NO MORE THAN 2" ABOVE CONCRETE SURFACE, ALIGNED, AND CENTERED ON CABINET.
3. CABINET POWER CONDUIT SHALL BE ON THE RIGHT SIDE WHEN FACING FRONT OF CABINET.
4. 2" DIA. SPARE CONDUIT SHALL BE INSTALLED AND RUN INTO THE JUNCTION BOX.
5. ENDS OF 1/2" DIA. DRAIN POLY TUBING SHALL BE CUT FLUSHED WITH CONCRETE SURFACE.
6. 1-1/2" DIA. SPARE CONDUIT SHALL BE INSTALLED AND RUN INTO SERVICE CABINET.
7. JOINT BETWEEN CABINET AND FOUNDATION SHALL BE SEALED USING A CLEAR WATERPROOF ADHESIVE CAULK.

| APPROVED BY CITY ENGINEER: Jacob Sweeting | DATE: 1/17/2022 | CITY OF AUBURN WASHINGTON | TRAFFIC SIGNAL CONTROLLER & FOUNDATION DETAIL |
|---|---|---|---|
| PUBLIC WORKS DEPARTMENT | | | STANDARD DETAIL: T-22.4 |

Plotted by: Craig Dobyns on 1/6/2022 File location: M:\Construction Standard Details\Current Working DWG\Traffic\STDETL-T-22.4

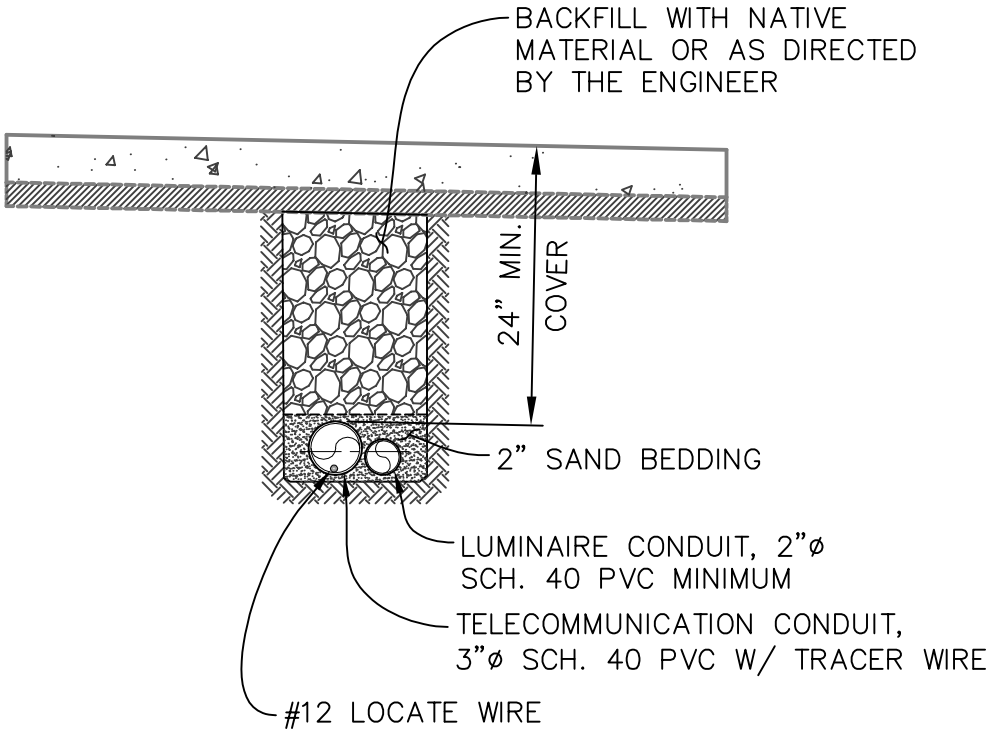


NOTES:

1. PULL STRING SHALL BE INSTALLED IN ALL SPARE CONDUIT.
2. SEE STD. DETAIL T-18 FOR CONDUIT PLACEMENT.

| | | | |
|---|---|---|---|
| APPROVED BY CITY ENGINEER: | DATE: 01/05/2021 | CITY OF AUBURN WASHINGTON | TELECOMMUNICATION AND LUMINAIRE ELECTRICAL TRENCH |
| PUBLIC WORKS DEPARTMENT | | | STANDARD DETAIL: T-23.3 |

Plotted by: Craig Dobyns on 12/30/2020 File location: M:\Construction Standard Details\Current Working DWG\Traffic\STDETL-T-23.3

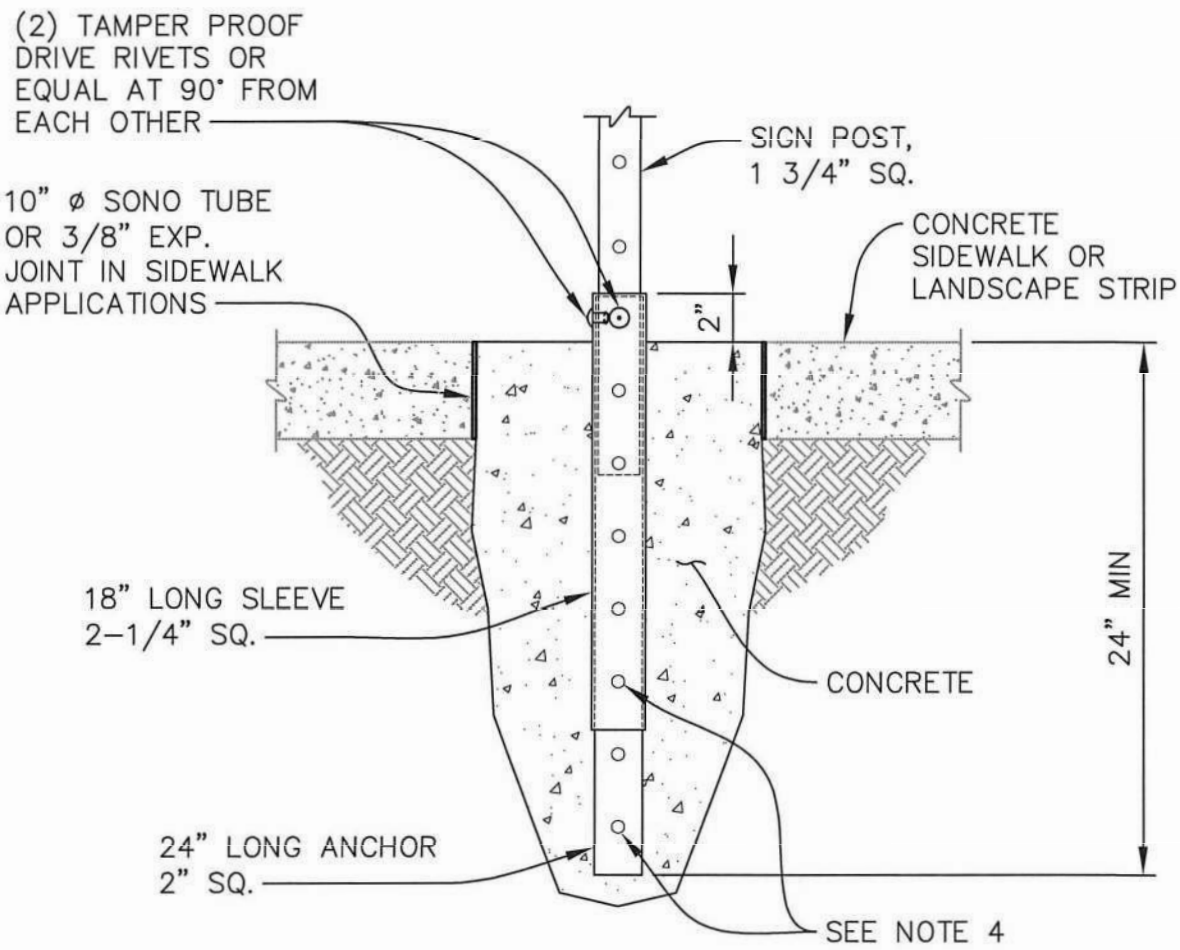


**NOTES:**

1. ALL TUBING MATERIAL SHALL BE "UNISTRUT TELESPAR" TYPE GALVANIZED STEEL (ASTM A570 GRADE 33) OR ENGINEER APPROVED EQUIVALENT.
2. SIDEWALKS AND PAVED AREAS SHALL BE CORE DRILLED BEFORE SIGN INSTALLATION.
3. SIGNS SHALL HAVE A MIN. HEIGHT OF 7 FT. FROM THE LOWER EDGE OF THE SIGN TO SIDEWALK GRADE, AND A 2 FT. LATERAL OFFSET FROM THE FACE OF CURB TO THE NEAR EDGE OF SIGN. SIGN LOCATION SHALL BE AS SHOWN ON PLANS AND PER MANUAL ON UNIFORM TRAFFIC CONTROL DEVICES (M.U.T.C.D).
4. WRAP ANCHOR TUBING WITH TAPE BEFORE PLACING IN CONCRETE.
5. DEMONSTRATE SIGN POST IS REMOVABLE BEFORE RIVETING.

| APPROVED BY CITY ENGINEER: | DATE: 2/20/2018 | CITY OF AUBURN WASHINGTON | TYPICAL SIGN POST INSTALLATION |
|---|---|---|---|
| COMMUNITY DEVELOPMENT & PUBLIC WORKS DEPT. | | | STANDARD DETAIL: T-24.2 |

Plotted by: Craig Dobyns on 2/2/2018 File location: M:\Construction Standard Details\Current Working DWG\Traffic\STDETL-T-24.2

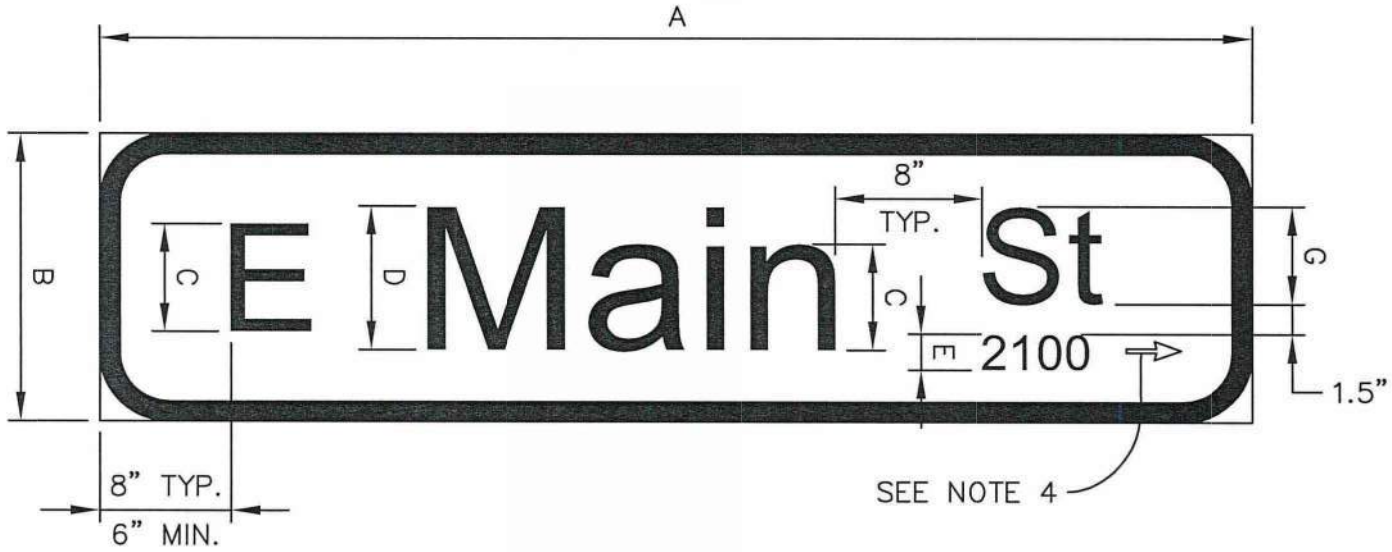


| SIGN STANDARDS | |
|---|---|
| DIMENSION | INCHES |
| A | VARIES |
| B | 16 |
| C | 6 |
| D | 8 |
| E | 2 |
| F | 1 1/4 |
| G | 4 1/2 |
| R | 3 |

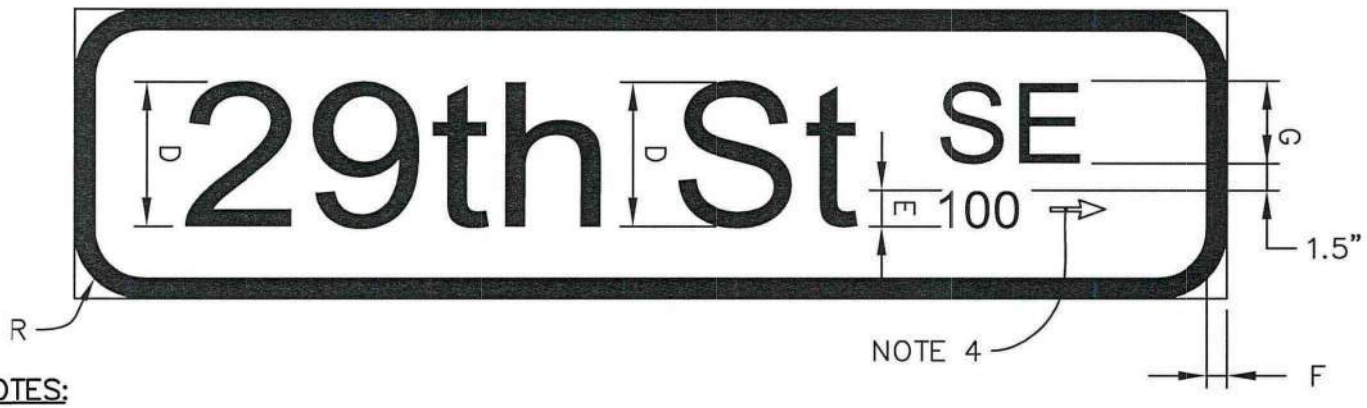


NOTES:

1. SIGN BLADES SHALL BE 0.125" THICK TEMPERED ALUMINUM ALLOY.
2. BACKGROUND FOR STREET NAME SIGNS SHALL BE GREEN COLOR, ENGINEERING GRADE REFLECTIVE SHEETING.
3. ALL LETTERING AND 1-1/4" BORDER FOR STREET NAME SIGNS SHALL BE WHITE COLOR, REFLECTIVE HIGH INTENSITY GRADE SHEETING.
4. ARROW ON THE RIGHT SIDE OF THE BLOCK NUMBER INDICATES AN INCREASING BLOCK NUMBER IN THE ARROW DIRECTION.
5. FOR GUIDANCE ON LETTERING AND NUMERAL WIDTHS AND SPACING, SEE WSDOT "SIGN FABRICATION MANUAL" APPENDIX C.
6. ENGINEER APPROVAL OF SIGN PROOF(S) REQUIRED BEFORE FABRICATION.

APPROVED BY CITY ENGINEER:

DATE: 8/5/2016

CITY OF AUBURN WASHINGTON

MAST ARM MOUNTED, STREET NAME SIGN DETAIL

COMMUNITY DEVELOPMENT & PUBLIC WORKS DEPT.

STANDARD DETAIL: T-25.1

| STREET NAME STANDARD | |
|---|---|
| NAME | ABBREVIATION |
| AVENUE | Ave |
| BOULEVARD | Blvd |
| COURT | Ct |
| DRIVE | Dr |
| LANE | Ln |
| LOOP | Lp |
| PARKWAY | Pkwy |
| PLACE | Pl |
| ROAD | Rd |
| STREET | St |
| STREET SOUTHEAST | St SE |
| WAY | Way |

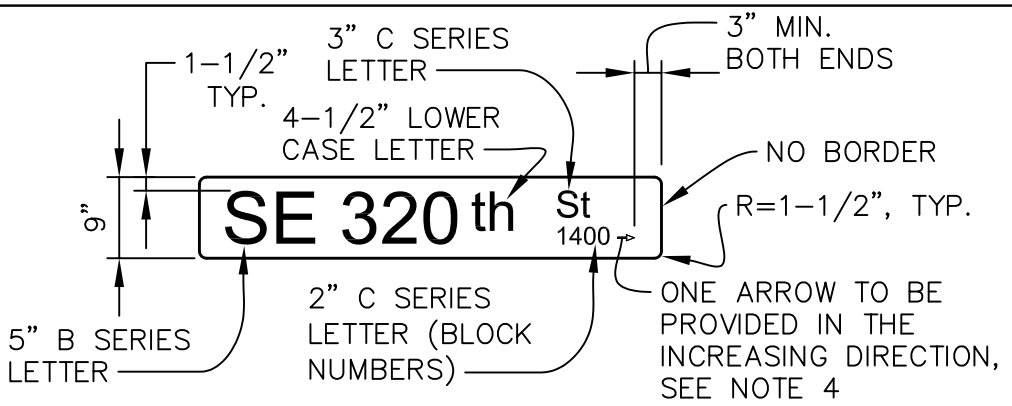


PUBLIC ROAD SIGN

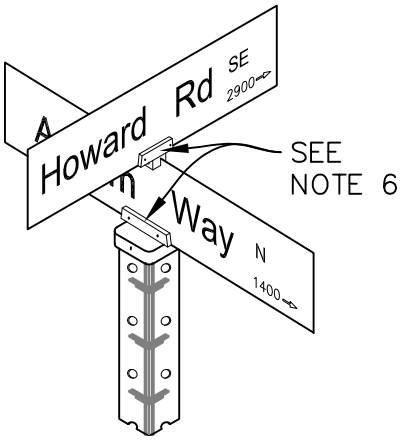


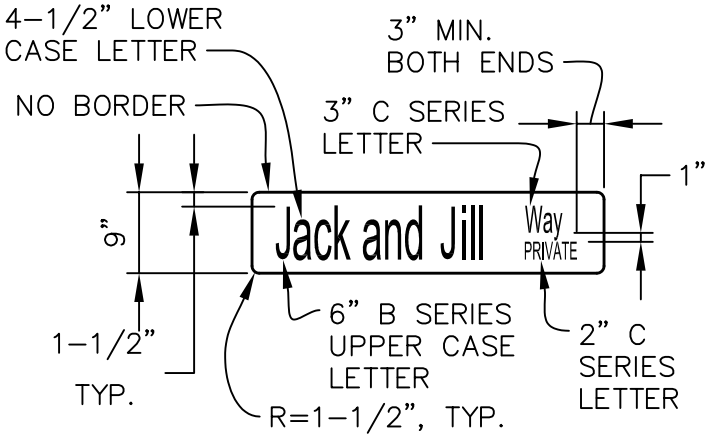


PRIVATE ROAD SIGN

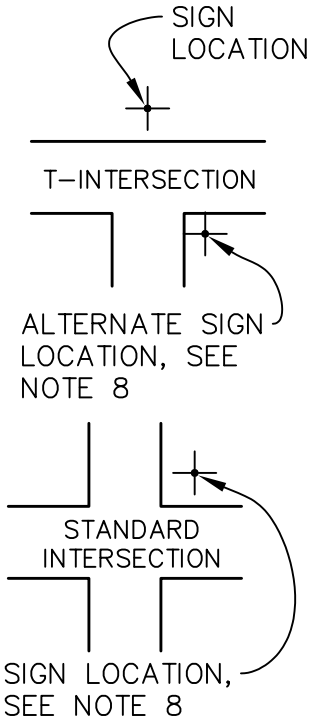


SIGN PLACEMENT

EXAMPLES:

124th Ave SE 31600

M St SE 20

W Main St 25

37th St SE 1400

Howard Rd SE 2900 — NORTH VIEW

Howard Rd SE 2900 — SOUTH VIEW

Auburn Way N 2900 — EAST VIEW

Auburn Way N 2900 — WEST VIEW

NOTES:

1. NAME PLATE SHALL BE 9" WIDE X VARIABLE LENGTH OF FLAT BLANK, 0.080 GAUGE ALUMINUM, TREATED WITH ALODINE 1200 CONVERSION COATING, ZUMAR OR APPROVED EQUIVALENT.
2. BACKGROUND FOR PUBLIC ROAD STREET NAME SIGNS SHALL BE GREEN COLOR, ENGINEERING GRADE REFLECTIVE SHEETING.
3. BACKGROUND FOR PRIVATE ROAD STREET NAME SIGNS SHALL BE BLUE COLOR, ENGINEERING GRADE REFLECTIVE SHEETING.
4. ALL LETTERING FOR STREET NAME SIGNS SHALL BE WHITE COLOR, REFLECTIVE HIGH INTENSITY GRADE SHEETING.
5. POST INSTALLATION SHALL CONFORM TO REQUIREMENTS SET BY STANDARD DETAIL T-24.
6. HARDWARE SHALL BE ZUMAR STYLE 850FL2, 808F90A, OR APPROVED EQUIVALENT.
7. MOUNTING HEIGHT SHALL BE 8'-0".
8. WHEN AN INTERSECTION IS STOP SIGN CONTROLLED, THE STREET NAME SIGN SHALL BE PLACED ON THE SAME POST AND ABOVE THE STOP SIGN.
9. ENGINEER APPROVAL OF SIGN PROOF(S) SHALL BE REQUIRED BEFORE FABRICATION.

PRIVATE TRACT SIGNS:

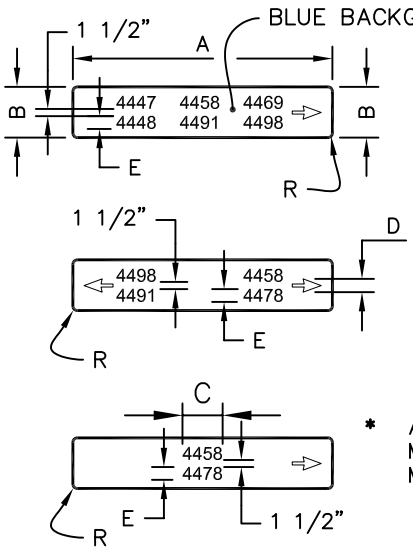


| PRIVATE TRACT SIGN STANDARDS | |
|---|---|
| DIMENSION | INCHES |
| A | 42* |
| B | 12 |
| C | 12* |
| D | 4 |
| E | 4 |
| R | 1½ |

* ADDITIONAL REQUIREMENTS MAY APPLY OR DIMENSIONS MAY VARY.

APPROVED BY CITY ENGINEER: Jacob Sweeting

DATE: 02/09/2023

CITY OF AUBURN WASHINGTON

POST MOUNTED, STREET NAME SIGN DETAIL

PUBLIC WORKS DEPARTMENT

STANDARD DETAIL: T-26.4

Plotted by: Craig Dobyns on 1/23/2023 File location: M:\Construction Standard Details\Current Working DWG\Traffic\STDETL-T-26.4

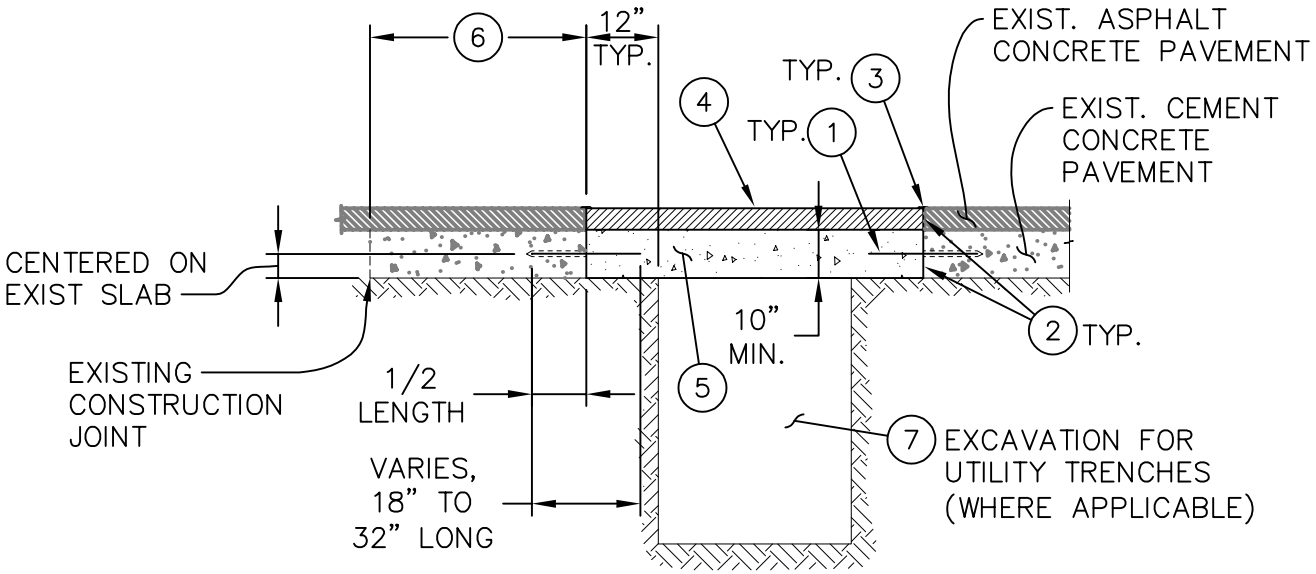


**NOTES:**

1. FOR TRANSVERSE JOINTS CONSTRUCTION, THE DOWEL BARS SHALL BE 1 1/2" DIA. x 18" LONG AND INSTALLED AT 12" ON CENTER. FOR LONGITUDINAL JOINTS CONSTRUCTION, TIE BARS SHALL BE #5 x 32" LONG AND INSTALLED AT 36" ON CENTER. DRILL HOLES TO EXISTING ADJACENT CONCRETE PANELS AND PARALLEL TO EXISTING GRADE. HOLES SHALL BE BLOWN CLEAN WITH COMPRESSED AIR PRIOR TO APPLYING EPOXY RESIN INTO THE HOLES. THEN INSERT EPOXY RESIN COATED BARS IN THE HOLES SUCH THAT THE BACK OF THE HOLES ARE FILLED FIRST.
2. APPLY HOT POURED ELASTIC TYPE SEALANT TO ENTIRE EDGE AND FULL DEPTH OF THE JOINTS BEFORE PAVING.
3. APPLY SURFACE SEAL WITH ASPHALT CEMENT AR-4000 AT MATCHLINES.
4. WHERE REPLACEMENT OF EXISTING ASPHALT CONCRETE PAVEMENT IS REQUIRED, APPLY NEW HMA CL. 1/2" TO MATCH EXISTING THICKNESS.
5. MATCH THICKNESS OF EXISTING CEMENT CONCRETE PAVEMENT, BUT IN NO CASE SHALL IT BE LESS THAN 10". CEMENT CONCRETE SHALL BE CL. 4000 WITH 5% AIR ENTRAINMENT. TRAFFIC SHALL BE KEPT OFF NEW PAVEMENT FOR 7 DAYS OR UNTIL DESIGN STRENGTH IS ACHIEVED, WHICHEVER COMES FIRST.
6. WHENEVER A REMAINING CONCRETE PANEL IS 3' WIDE OR LESS IN ANY DIRECTION FROM EXISTING CONSTRUCTION JOINT TO NEW CONSTRUCTION JOINT, IT SHALL BE REMOVED AND REPLACED AS PART OF THE NEW PANEL.
7. BEDDING/BACKFILL SHALL BE PER STANDARD DETAIL T-01.

| APPROVED BY CITY ENGINEER: Jacob Sweeting | DATE: 02/09/2023 | CITY OF AUBURN WASHINGTON | REPAIR OF EXISTING CEMENT CONCRETE PANEL IN ROADWAY |
|---|---|---|---|
| PUBLIC WORKS DEPARTMENT | | | STANDARD DETAIL: T-27.2 |

Plotted by: Craig Dobyns on 2/6/2023 File location: M:\Construction Standard Details\Current Working DWG\Traffic\STDETL-T-27.1

**ORIENTATION LOCATIONS:**

- LUMINAIRES SHALL BE MOUNTED AT 90° AND 270°
- BANNER SUPPORT ARMS SHALL BE MOUNTED AT 0°
- FLOWER BASKET SUPPORT ARMS SHALL BE MOUNTED AT 90° & 270°
- RECEPTACLES SHALL BE MOUNTED AT 180°
- HANDHOLES SHALL BE MOUNTED AT 90°
- STREET NAME SIGNS SHALL BE MOUNTED AT 0° & 90°
- STOP SIGN SHALL BE MOUNTED AT 270°

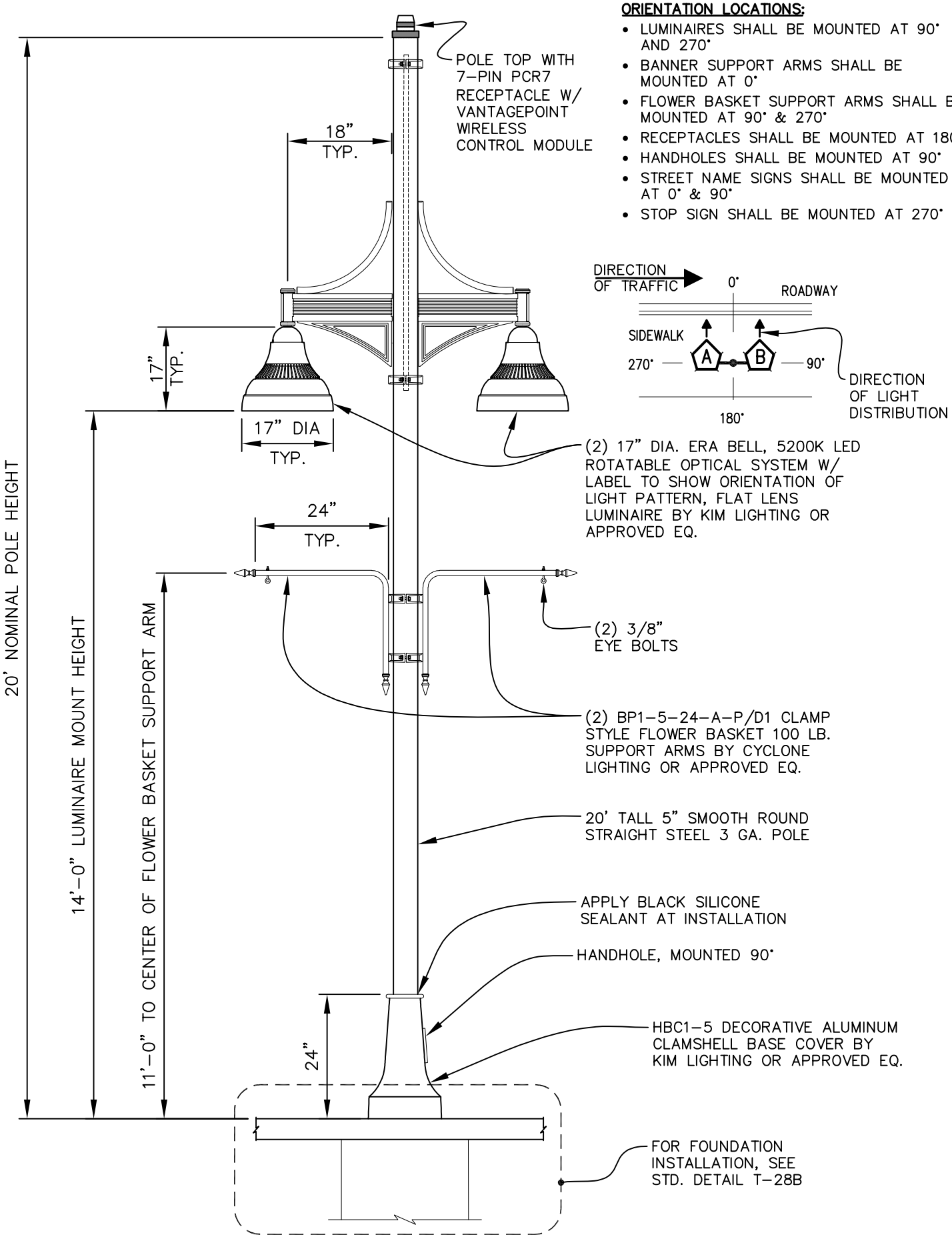


| | | | |
|---|---|---|---|
| APPROVED BY CITY ENGINEER: Jacob Sweeting | DATE: 1/17/2022 | CITY OF AUBURN WASHINGTON | DOWNTOWN PEDESTRIAN POLE MOUNT LIGHTING STANDARD |
| PUBLIC WORKS DEPARTMENT | | | STANDARD DETAIL: T-28.4 |

Plotted by: Craig Dobyns on 1/6/2022 File location: M:\Construction Standard Details\Current Working DWG\Traffic\STDETL-T-28.4

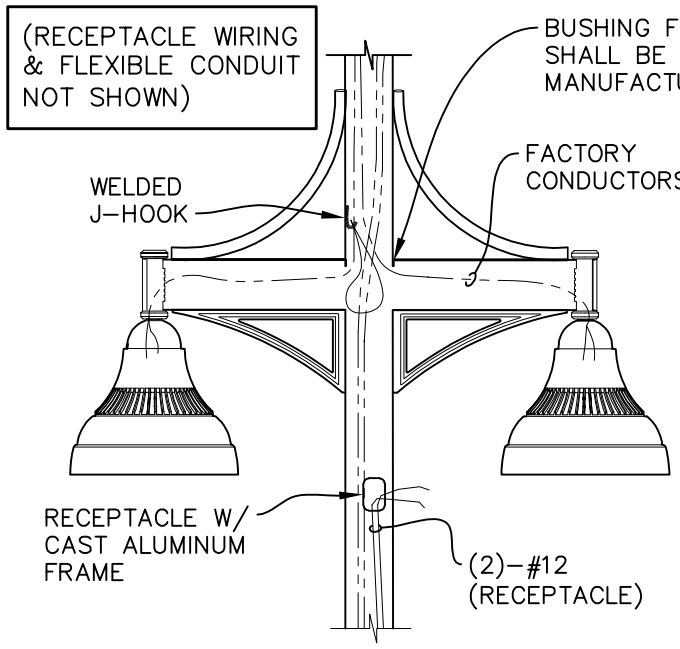


## LUMINAIRE WIRING

NOT TO SCALE

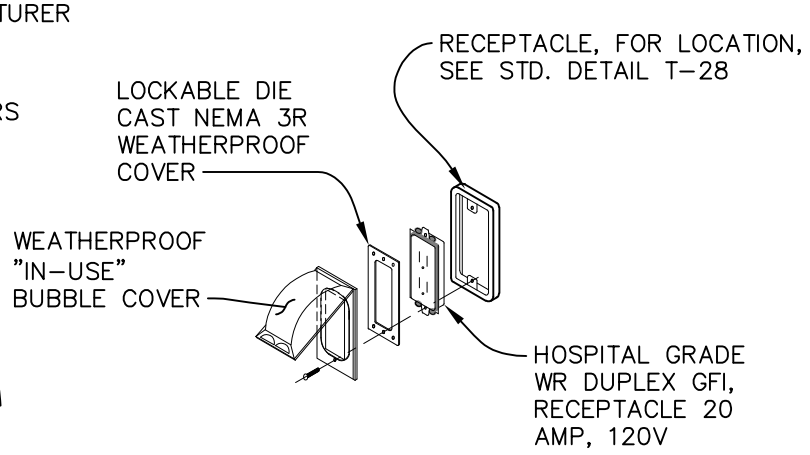


## POLE RECEPTACLE

NOT TO SCALE

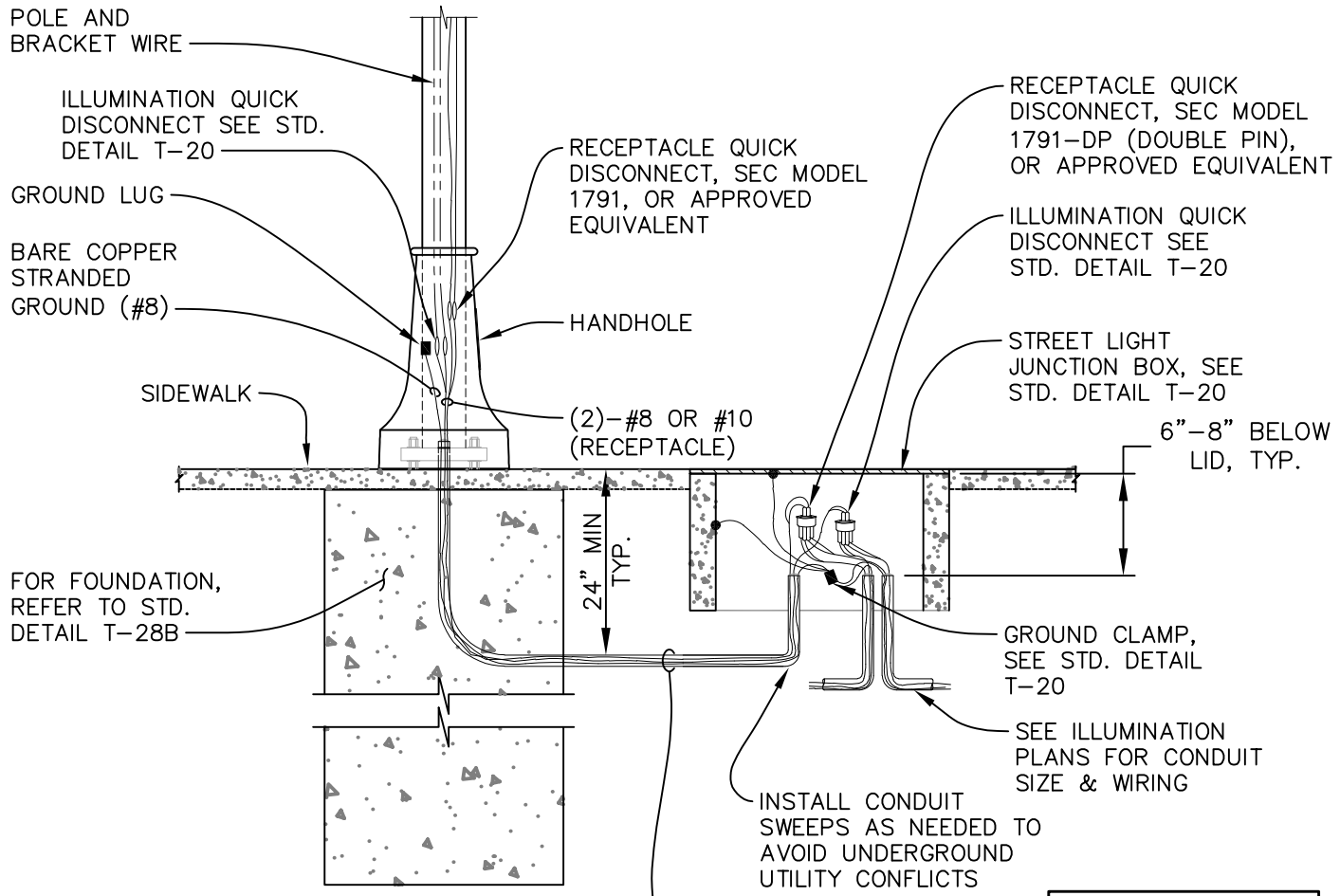


## TYPICAL LUMINAIRE/ JUNCTION BOX WIRING

NOT TO SCALE

* REFER TO STD. DETAIL T-20 FOR INFORMATION NOT SHOWN
* SPARE/EMPTY CONDUITS SHALL CONTAIN DETECTABLE PULL TAPE

| APPROVED BY CITY ENGINEER: Jacob Sweeting | DATE: 02/09/2023 | CITY OF AUBURN WASHINGTON | DOWNTOWN PEDESTRIAN POLE MOUNT LIGHTING STANDARD |
|---|---|---|---|
| PUBLIC WORKS DEPARTMENT | | | STANDARD DETAIL: T-28A.4 |

Plotted by: Craig Dobyns on 2/6/2023 File location: M:\Construction Standard Details\Current Working DWG\Traffic\STDETL-T-28A.4

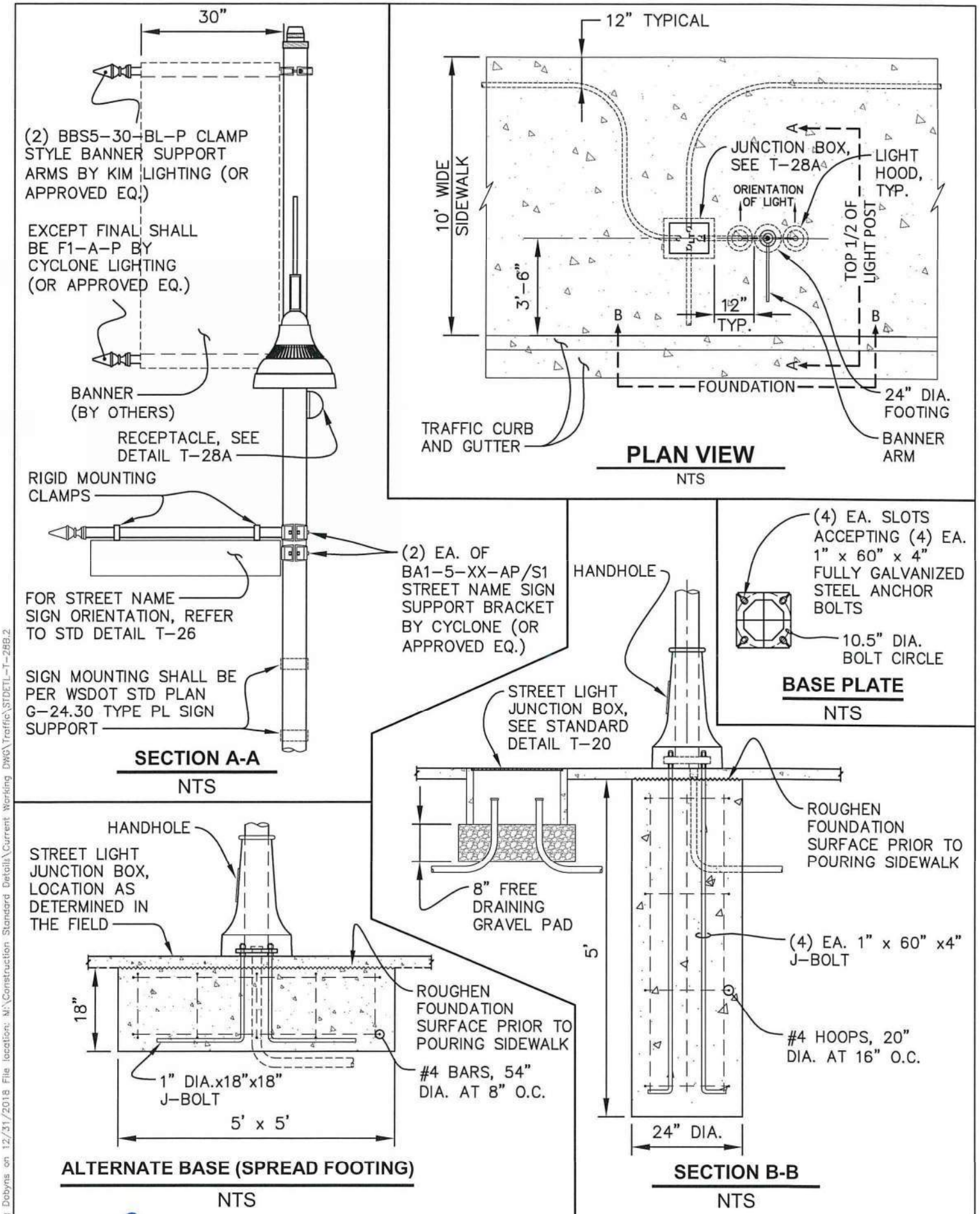


APPROVED BY CITY ENGINEER: DATE: 12/31/18

CITY OF AUBURN WASHINGTON

DOWNTOWN PEDESTRIAN POLE MOUNT LIGHTING STANDARD

PUBLIC WORKS DEPARTMENT

STANDARD DETAIL: T-28B.2

Plotted by: Craig Dobyns on 12/31/2018 File location: M:\Construction Standard Details\Current Working DWG\Traffic\STDETL-T-28B.2

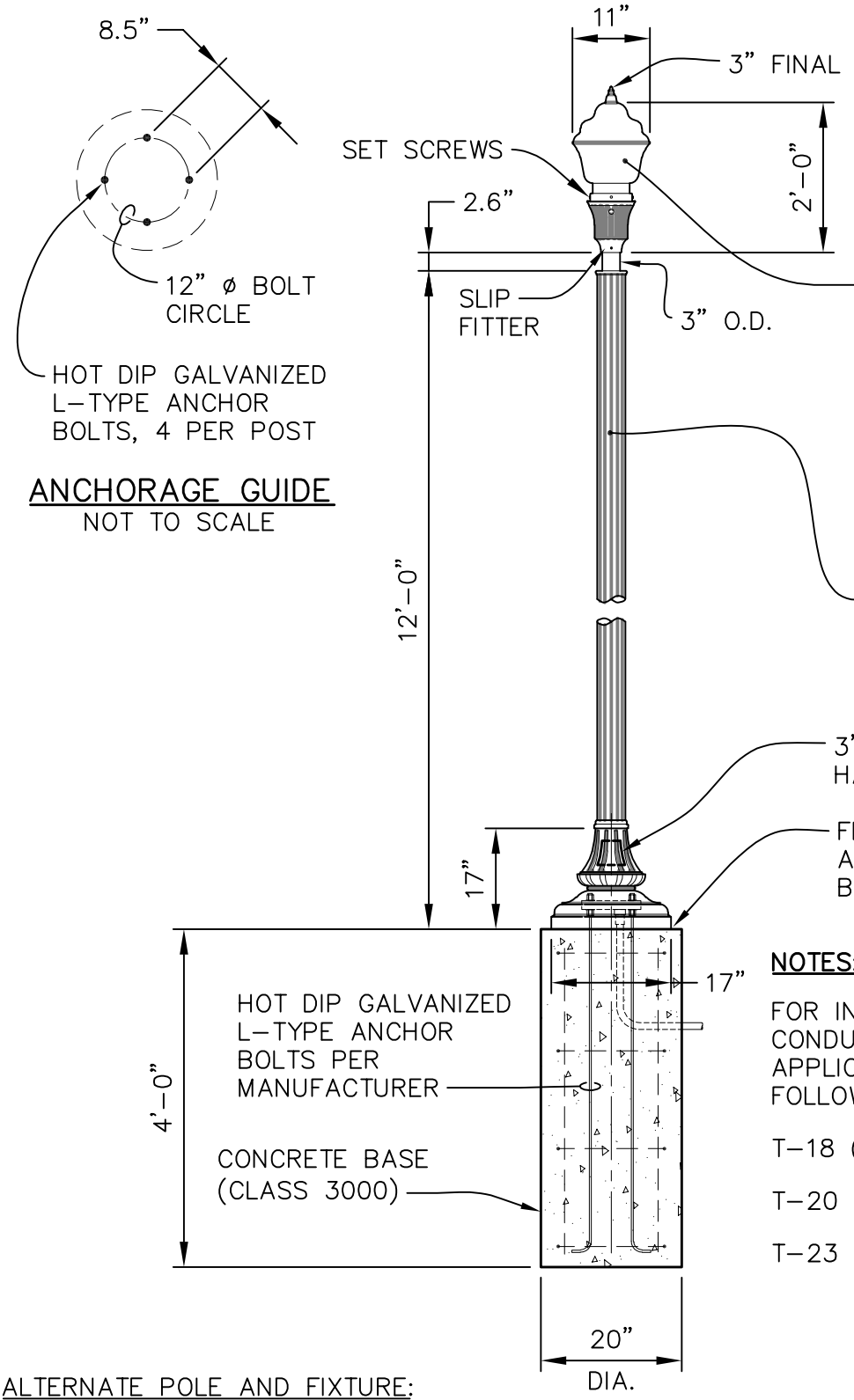


## ANCHORAGE GUIDE
NOT TO SCALE

## ELEVATION
NOT TO SCALE

**NOTES:**

FOR INSTALLATION OF ELECTRICAL CONDUIT AND JUNCTION BOX, SEE APPLICABLE PORTIONS OF THE FOLLOWING STANDARD DETAILS:

T-18 (LUMINAIRE & CONDUIT LAYOUT)

T-20 (LUMINAIRE WIRING)

T-23 (ELECTRICAL TRENCH)

ALTERNATE POLE AND FIXTURE:

KING LUMINAIRE WITH FIELD SWITCHABLE DIMABLE DRIVER:
K445-T1GR-IV-60
(SSL)-4004-120:277V-K24-(MOD)PR7-3K

HAPCO ARLEN LIGHT POLE:
37936-012 (GREEN OR BLACK)

| APPROVED BY CITY ENGINEER: Jacob Freeding | DATE: 1/17/2022 | CITY OF AUBURN WASHINGTON | LOCAL RESIDENTIAL ORNAMENTAL STREET LIGHTING STANDARD |
|---|---|---|---|
| PUBLIC WORKS DEPARTMENT | | | STANDARD DETAIL: T-29.5 |

Plotted by: Craig Dobyns on 1/6/2022 File location: M:\Construction Standard Details\Current Working DWG\Traffic\STDETL-T-29.5

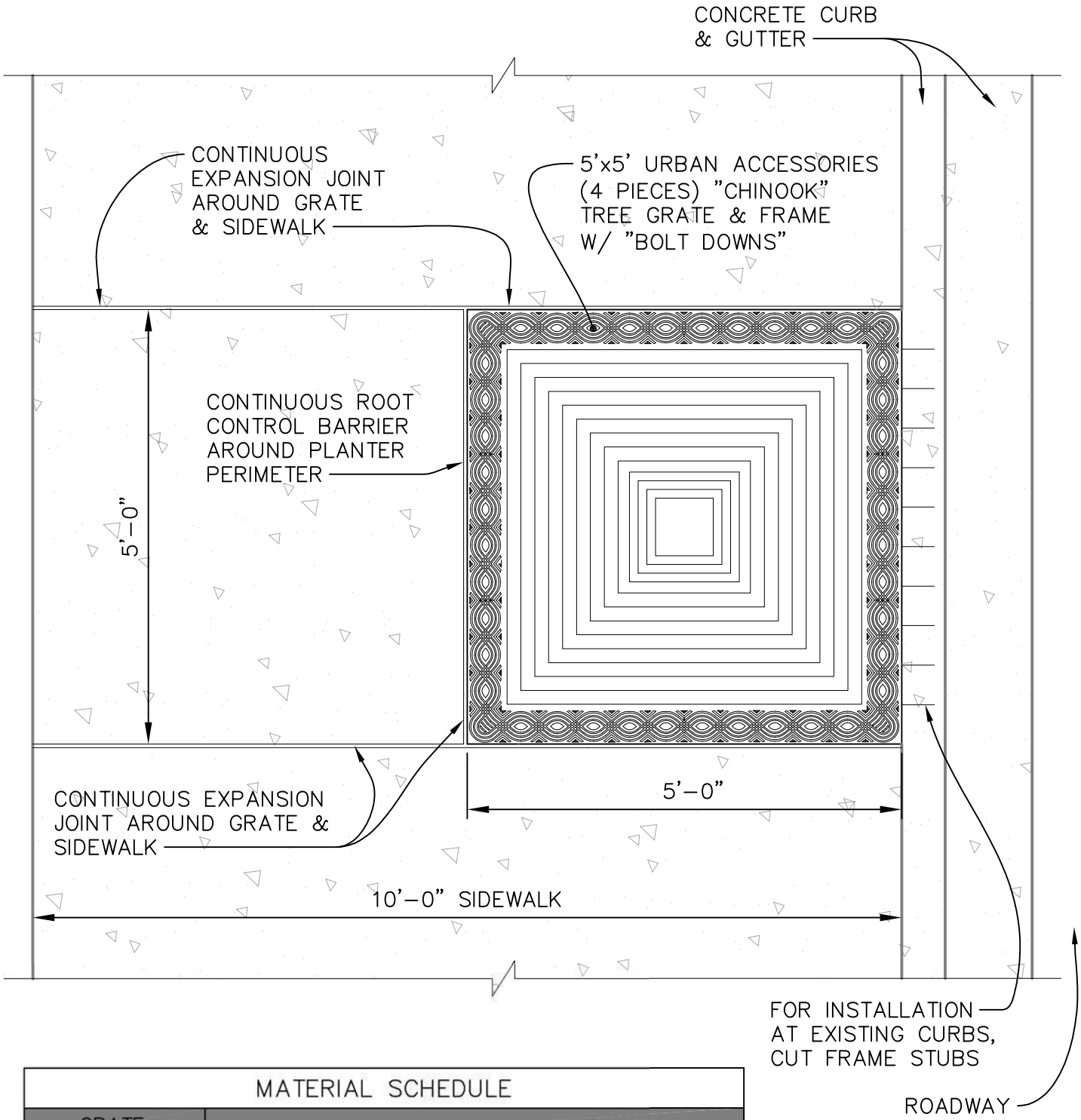


| MATERIAL SCHEDULE | |
|---|---|
| GRATE: | |
| MATERIAL | GREY IRON ASTM A48 CLASS 358 OR BETTER |
| FINISH | NATURAL PATINA OF RAW IRON |
| FRAME: | |
| MATERIAL | MILD STEEL ASTM A36 |
| FINISH | NATURAL PATINA OF RAW STEEL |
| LOAD RATING: PEDESTRIAN | |

APPROVED BY CITY ENGINEER: Jacob Jewett

DATE: 01/05/2021

CITY OF AUBURN WASHINGTON

TYPICAL PLAN FOR TREE GRATE

PUBLIC WORKS DEPARTMENT

STANDARD DETAIL: T-30.2

Plotted by: Craig Dobyns on 12/16/2020 File location: M:\Construction Standard Details\Current Working DWG\Traffic\STDETL-T-30.2

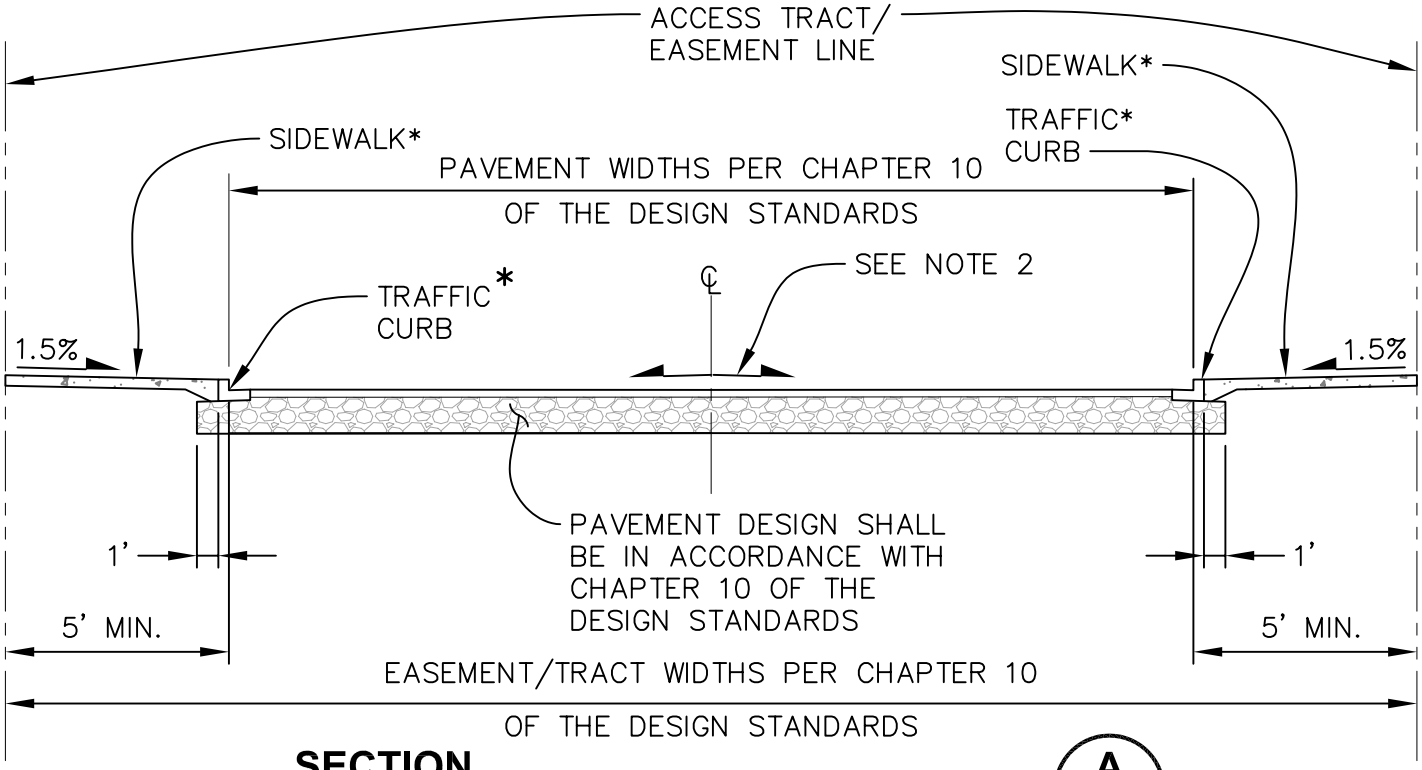


**SECTION** A -

NTS

NOTES:

1. CEMENT CONCRETE TRAFFIC CURB & GUTTER SHALL BE IN ACCORDANCE W/ WSDOT STANDARD PLAN F-10.12
2. SIDEWALK SHALL BE PER STD. DETAIL T-13, T-14, OR T-15.

* CURB AND SIDEWALK REQUIRED ON BOTH SIDES OF ACCESS ROAD/DRIVEWAY FOR COMMERCIAL AND INDUSTRIAL USE. CURB AND SIDEWALK REQ'D ON ONE SIDE OF ACCESS ROAD/DRIVEWAY FOR RESIDENTIAL (3 OR MORE UNITS). CURB AND SIDEWALK MAY BE OMITTED WHERE ACCESS ROAD/DRIVEWAY SERVES 2 OR LESS RESIDENTIAL UNITS.

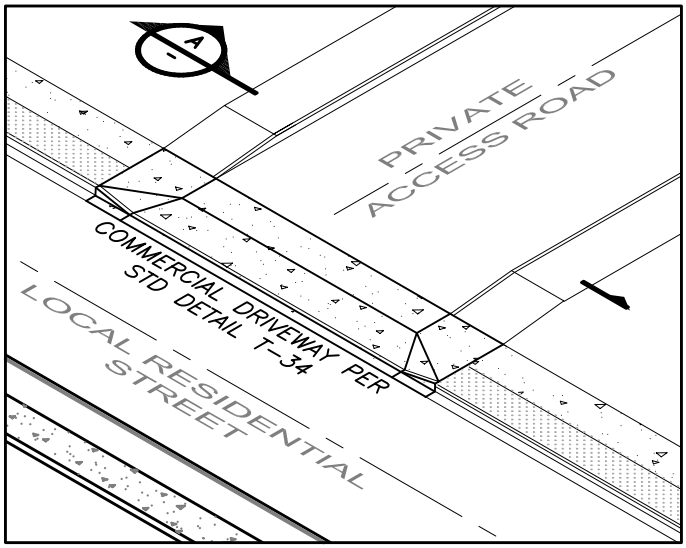


**ISOMETRIC**

NTS

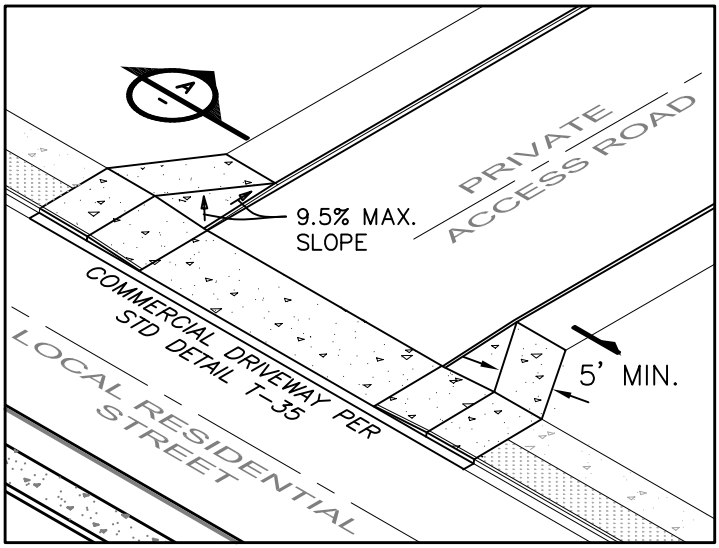


**ISOMETRIC**

NTS

| APPROVED BY CITY ENGINEER: | DATE: | CITY OF AUBURN WASHINGTON | PRIVATE ACCESS ROAD / SHARED DRIVEWAY |
|---|---|---|---|
| Jacob Jewett | 02/09/2023 | | |
| PUBLIC WORKS DEPARTMENT | | | STANDARD DETAIL: T-31.5 |

Plotted by: Craig Dobyns on 2/9/2023 File location: M:\Construction Standard Details\Current Working DWG\Traffic\STDETL-T-31.5

**DELINEATOR**
NTS

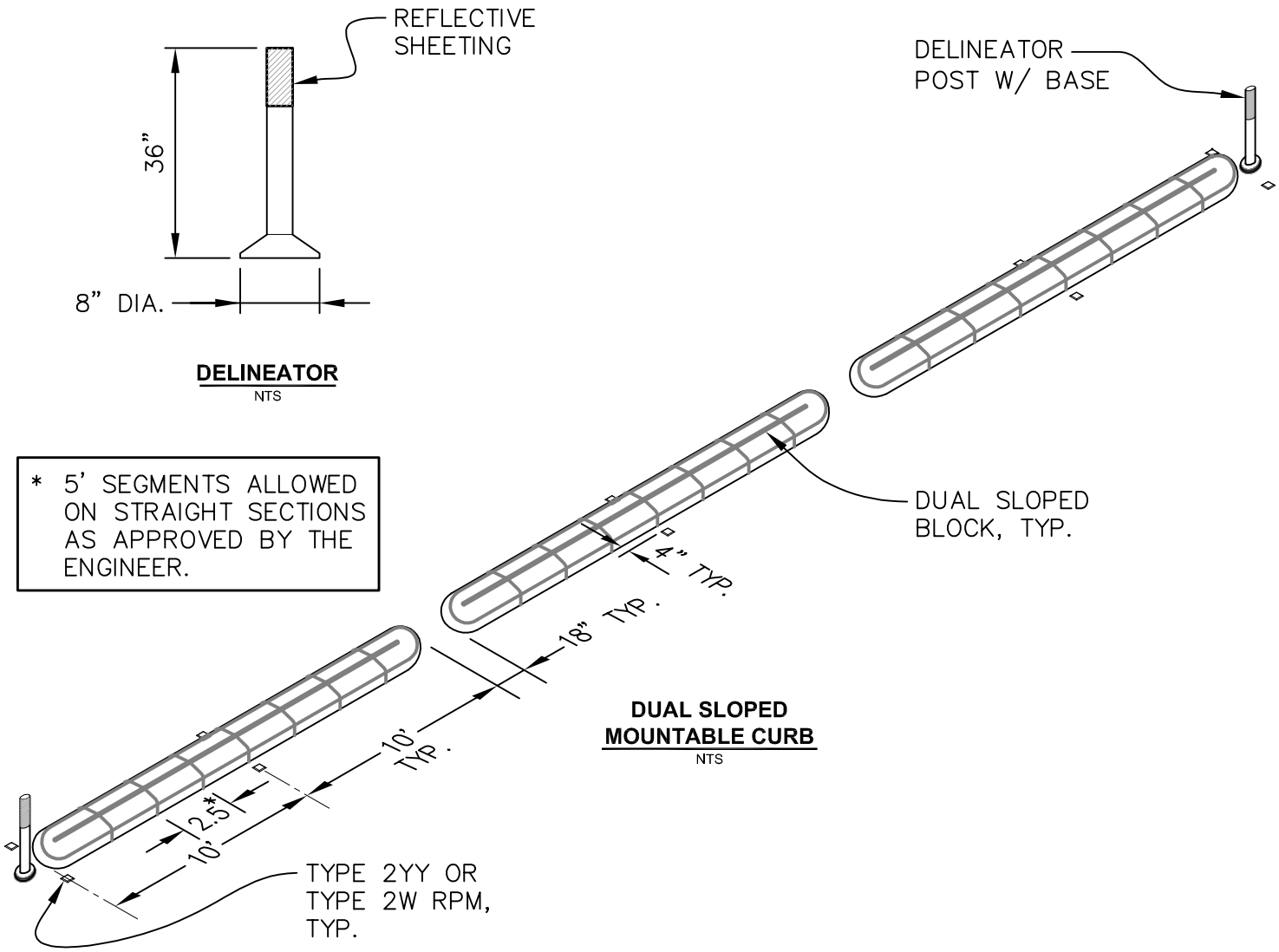


* 5' SEGMENTS ALLOWED ON STRAIGHT SECTIONS AS APPROVED BY THE ENGINEER.

**DUAL SLOPED MOUNTABLE CURB**
NTS

NOTES:

1. PRECAST CONCRETE DUAL FACED, SLOPED MOUNTABLE CURB SHALL BE PER WSDOT STANDARD PLAN F-10.64, 12" WIDE.
2. CURB SHALL BE INSTALLED USING EPOXY ADHESIVE PER WSDOT STANDARD SPECIFICATION 9-26.2. EPOXY SHALL BE APPLIED AT A RATE OF ONE GALLON PER SEVEN FEET OF CURBING.
3. CURB SHALL BE INSTALLED IN 20' SEGMENTS, WITH 18" OPENING BETWEEN ENDS, OR MODIFIED TO FIT FIELD DIMENSIONS AS APPROVED BY THE ENGINEER.
4. CURB AND DELINEATOR SHALL BE THE SAME COLOR AS THE CHANNELIZATION STRIPE.
5. DELINEATOR BASE SHALL BE AFFIXED TO PAVEMENT WITH FLEXIBLE BITUMINOUS PAVEMENT MARKER ADHESIVE PER WSDOT STANDARD SPECIFICATION 9-02.1(8).
6. RPM'S SHALL BE PLACED AT EACH APPROACH END OF THE CURBING AND CENTERED ON EACH SECTION AS SHOWN. THEY SHALL BE THE SAME COLOR AS THE CHANNELIZATION STRIPE.
7. THIS DETAIL IS USED TO RETRO-FIT EXISTING STREETS. NEW CONSTRUCTION SHALL REQUIRE CAST-IN-PLACE CURBS.

| APPROVED BY CITY ENGINEER: | DATE: | CITY OF AUBURN WASHINGTON | PRECAST CONCRETE DUAL FACED SLOPED MOUNTABLE CURB RETROFIT |
|---|---|---|---|
| PUBLIC WORKS DEPARTMENT | | | STANDARD DETAIL: T-32.3 |

Plotted by: Craig Dobyns on 12/30/2020 File location: M:\Construction Standard Details\Current Working DWG\Traffic\STDETL-T-32.3

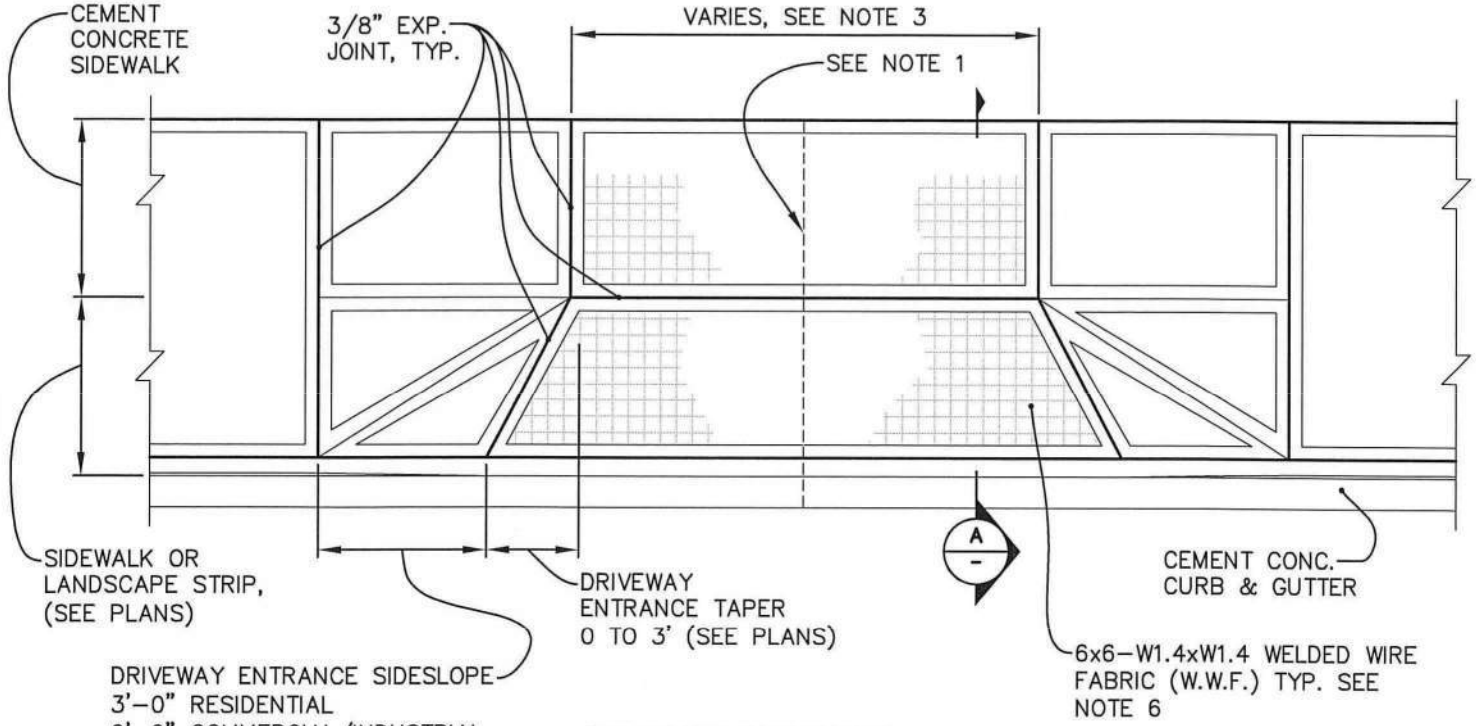


**STANDARD DRIVEWAY**

NTS

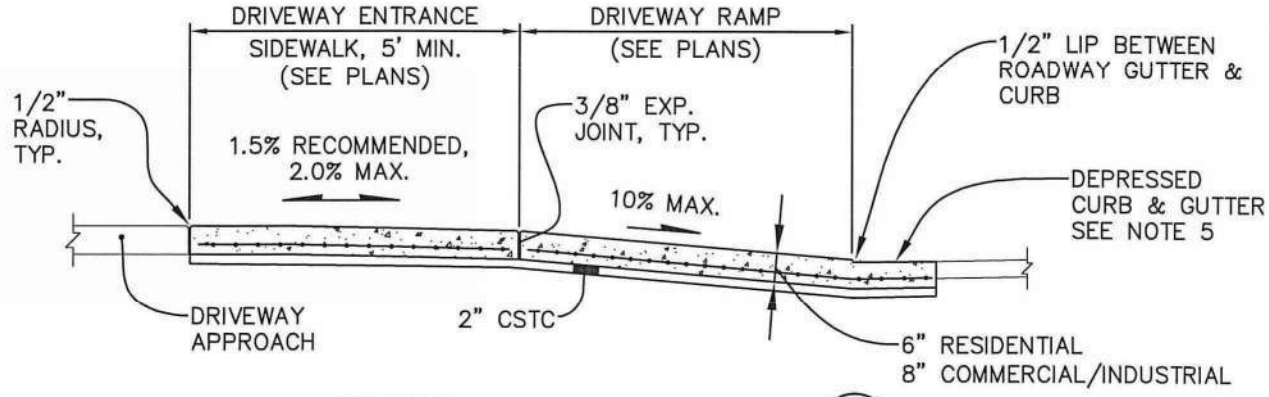


**SECTION** A

NTS

**NOTES:**

1. WHEN THE DRIVEWAY WIDTH EXCEEDS 15'(FT), CONSTRUCT A FULL DEPTH EXPANSION JOINT WITH 3/8" JOINT FILLER ALONG THE DRIVEWAY CENTERLINE. SEE WSDOT STANDARD PLAN F-30.10. CONSTRUCT EXPANSION JOINTS PARALLEL WITH THE CENTERLINE AS REQUIRED AT 15'(FT) MAXIMUM SPACING WHEN DRIVEWAY WIDTHS EXCEED 30'(FT).
2. RESIDENTIAL DRIVEWAY SERVING 2 OR MORE LIVING UNITS AND/OR THAT CONNECT TO AN ACCESS ROAD SHALL BE CONSTRUCTED AS A COMMERCIAL/INDUSTRIAL DRIVEWAY.
3. SEE STANDARD DETAIL T-04 FOR DRIVEWAY WIDTHS AND LOCATIONS.
4. CONCRETE SHALL BE CLASS 4000 WITH 5% AIR ENTRAINMENT WITH A BROOM FINISH PARALLEL TO CURB LINE.
5. DEPRESSED CURB FOR HEAVY COMMERCIAL/INDUSTRIAL DRIVEWAYS SHALL BE POURED INTEGRAL/MONOLITHIC TO DRIVEWAY.
6. WELDED WIRE FABRIC (W.W.F.) SHALL BE PLACED 3" FROM BOTTOM, AND 2" FROM ALL OTHER LIMITS. WELDED WIRE FABRIC (W.W.F.) NOT REQUIRED FOR RESIDENTIAL DRIVEWAYS.
7. WHEN DRIVEWAY OPENING IS TO BE CONSTRUCTED WHERE CURB EXISTS, THE ENTIRE CURB AND GUTTER SECTION SHALL BE REMOVED TO THE NEAREST EXPANSION JOINT ON EACH SIDE OF THE OPENING AND REPLACED.

| APPROVED BY CITY ENGINEER: | DATE: 2/23/2018 | CITY OF AUBURN WASHINGTON | STANDARD DRIVEWAY – OFFSET APRON |
|---|---|---|---|
| COMMUNITY DEVELOPMENT & PUBLIC WORKS DEPT. | | | STANDARD DETAIL: T-34.1 |

Plotted by: Craig Dobyns on 2/22/2018 File location: M:\Construction Standard Details\Current Working DWG\Traffic\STDETL-T-34.1

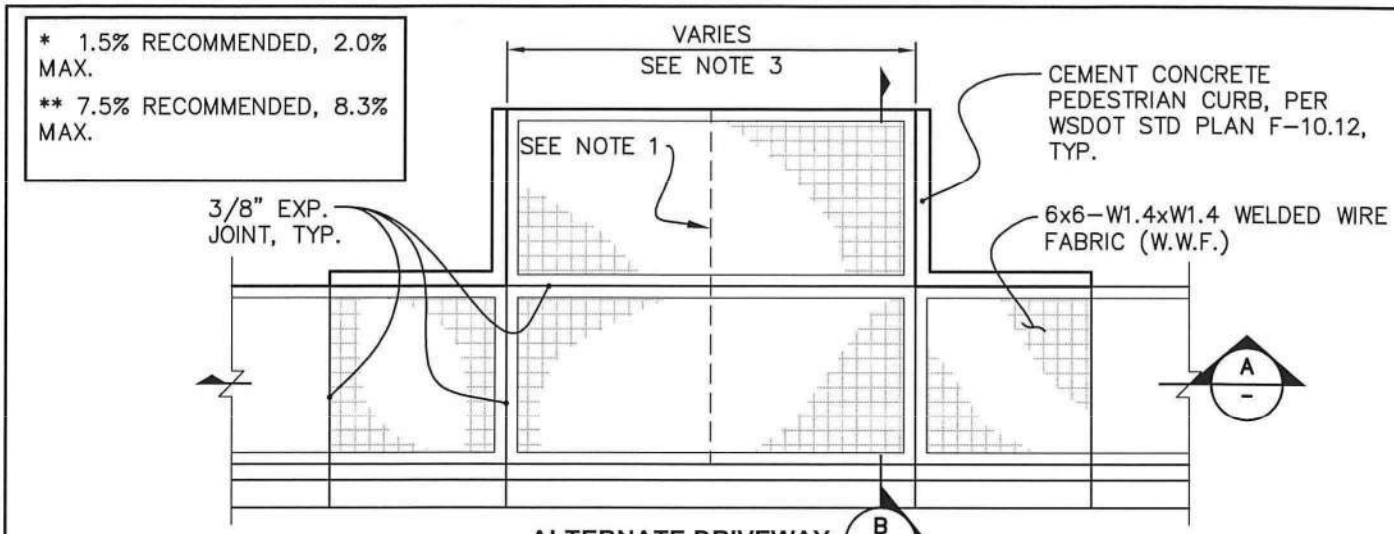


**ALTERNATE DRIVEWAY**
NTS

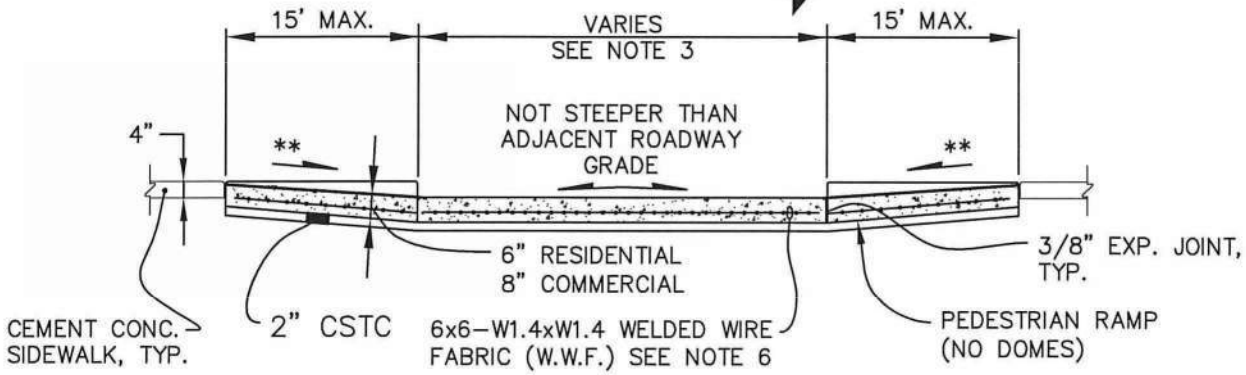


**SECTION** A
NTS

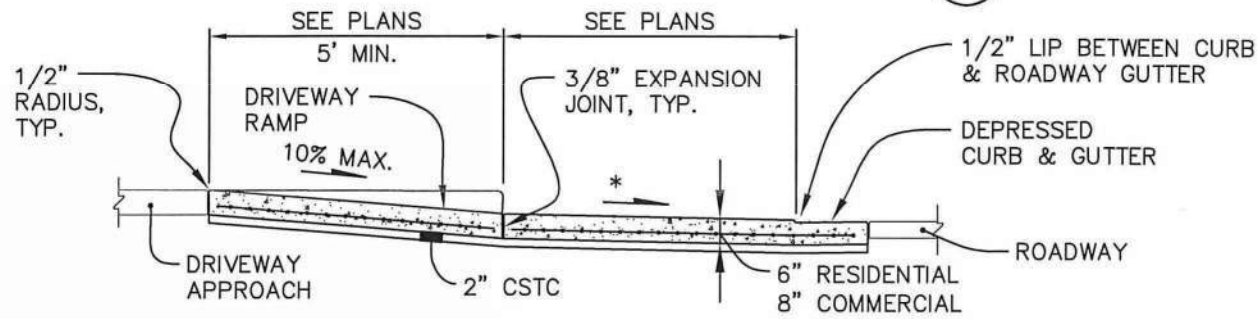


**SECTION** B
NTS

**NOTES:**

1. WHEN THE DRIVEWAY WIDTH EXCEEDS 15'(FT), CONSTRUCT A FULL DEPTH EXPANSION JOINT WITH 3/8" JOINT FILLER ALONG THE DRIVEWAY CENTERLINE. SEE WSDOT STANDARD PLAN F-30.10. CONSTRUCT EXPANSION JOINTS PARALLEL WITH THE CENTERLINE AS REQUIRED AT 15'(FT) MAXIMUM SPACING WHEN DRIVEWAY WIDTHS EXCEED 30'(FT).
2. RESIDENTIAL DRIVEWAY SERVING 2 OR MORE LIVING UNITS AND/OR THAT CONNECT TO AN ACCESS ROAD SHALL BE CONSTRUCTED AS A COMMERCIAL/INDUSTRIAL DRIVEWAY.
3. SEE STANDARD DETAIL T-04 FOR DRIVEWAY WIDTHS AND LOCATIONS.
4. CONCRETE SHALL BE CLASS 4000 WITH 5% AIR ENTRAINMENT WITH A BROOM FINISH PARALLEL TO CURB LINE.
5. DEPRESSED CURB FOR HEAVY COMMERCIAL/INDUSTRIAL DRIVEWAYS SHALL BE POURED INTEGRAL/MONOLITHIC TO DRIVEWAY.
6. WELDED WIRE FABRIC (W.W.F.) SHALL BE PLACED 3" FROM BOTTOM, AND 2" FROM ALL OTHER LIMITS. WELDED WIRE FABRIC (W.W.F.) NOT REQUIRED FOR RESIDENTIAL DRIVEWAYS.
7. WHEN DRIVEWAY OPENING IS TO BE CONSTRUCTED WHERE CURB EXISTS, THE ENTIRE CURB AND GUTTER SECTION SHALL BE REMOVED TO THE NEAREST EXPANSION JOINT ON EACH SIDE OF THE OPENING AND REPLACED.

| APPROVED BY CITY ENGINEER: | DATE: 2/23/2018 | CITY OF AUBURN WASHINGTON | ALTERNATE DRIVEWAY – INLINE (DROP) APRON |
|---|---|---|---|
| COMMUNITY DEVELOPMENT & PUBLIC WORKS DEPT. | | | STANDARD DETAIL: T-35.1 |

Plotted by: Craig Dobyns on 2/23/2018 File location: M:\Construction Standard Details\Current Working DWG\Traffic\STDETL-T-35.1

| STREET LIGHTING LAMP SCHEDULE | | | | | |
|---|---|---|---|---|---|
| STREET CLASSIFICATION | LAMP TYPE | UPDATED SPEC. LEOTEK PART # | WATTAGE | ALTERNATE SPEC. AEL PART # | WATTAGE |
| PRINCIPAL ARTERIAL | TYPE A | GCL2-80J-MV-40K-3R -GY-295-PCR7-WL | 206 | ATB2 P601 MVOLT R3 MP NL P7 | 175 |
| MINOR ARTERIAL | TYPE B | GCM3-60J-MV-40K-2R -GY-185-PCR7-WL | 123 | ATBO P303 MVOLT R2 MP NL P7 | 106 |
| MINOR ARTERIAL W/ CENTER TURN LANE OR MEDIAN | TYPE B | GCM3-60J-MV-40K-2R -GY-185-PCR7-WL | 123 | ATBO P303 MVOLT R2 MP NL P7 | 106 |
| NON-RESIDENTIAL COLLECTOR | TYPE B | GCM3-60J-MV-40K-2R -GY-185-PCR7-WL | 123 | ATBO P303 MVOLT R2 MP NL P7 | 106 |
| RESIDENTIAL COLLECTOR | TYPE D | GCJ3-30J-MV-40K-2R -GY-090-PCR7-WL | 64 | ATBO P203 MVOLT R2 MP NL P7 | 70 |
| RESIDENTIAL COLLECTOR WITH CENTER TURN LANE OR MEDIAN | TYPE D | GCJ3-30J-MV-40K-2R -GY-090-PCR7-WL | 64 | ATBO P203 MVOLT R2 MP NL P7 | 70 |
| LOCAL NON-RESIDENTIAL | TYPE D | GCJ3-30J-MV-40K-2R -GY-090-PCR7-WL | 64 | ATBO P203 MVOLT R2 MP NL P7 | 70 |
| LOCAL RESIDENTIAL AND LOCAL RESIDENTIAL ALTERNATIVE * | TYPE F | GCJ1-30J-MV-40K-2R -GY-055-PCR7-WL | 34 | ATBMic P104 MVOLT R2 MP NL P7 | 37 |

* SEE STD DETAIL T-29 FOR LOCAL RESIDENTIAL ORNAMENTAL OPTION.

**NOTE:**
SEE SECTION 9-29.10 OF THE SPECIAL PROVISIONS FOR REQUIREMENTS OF BRANDS NOT LISTED IN THIS SCHEDULE

APPROVED BY CITY ENGINEER: Jason Gruenberg

DATE: 2/7/24

CITY OF AUBURN WASHINGTON

STREET LIGHTING LAMP SCHEDULE

STANDARD DETAIL: T-37.6

PUBLIC WORKS DEPARTMENT

Plotted by: Craig Dobyns on 1/10/2024 File location: M:\Construction Standard Details\Current Working DWG\Traffic\STDETL-T-37.6

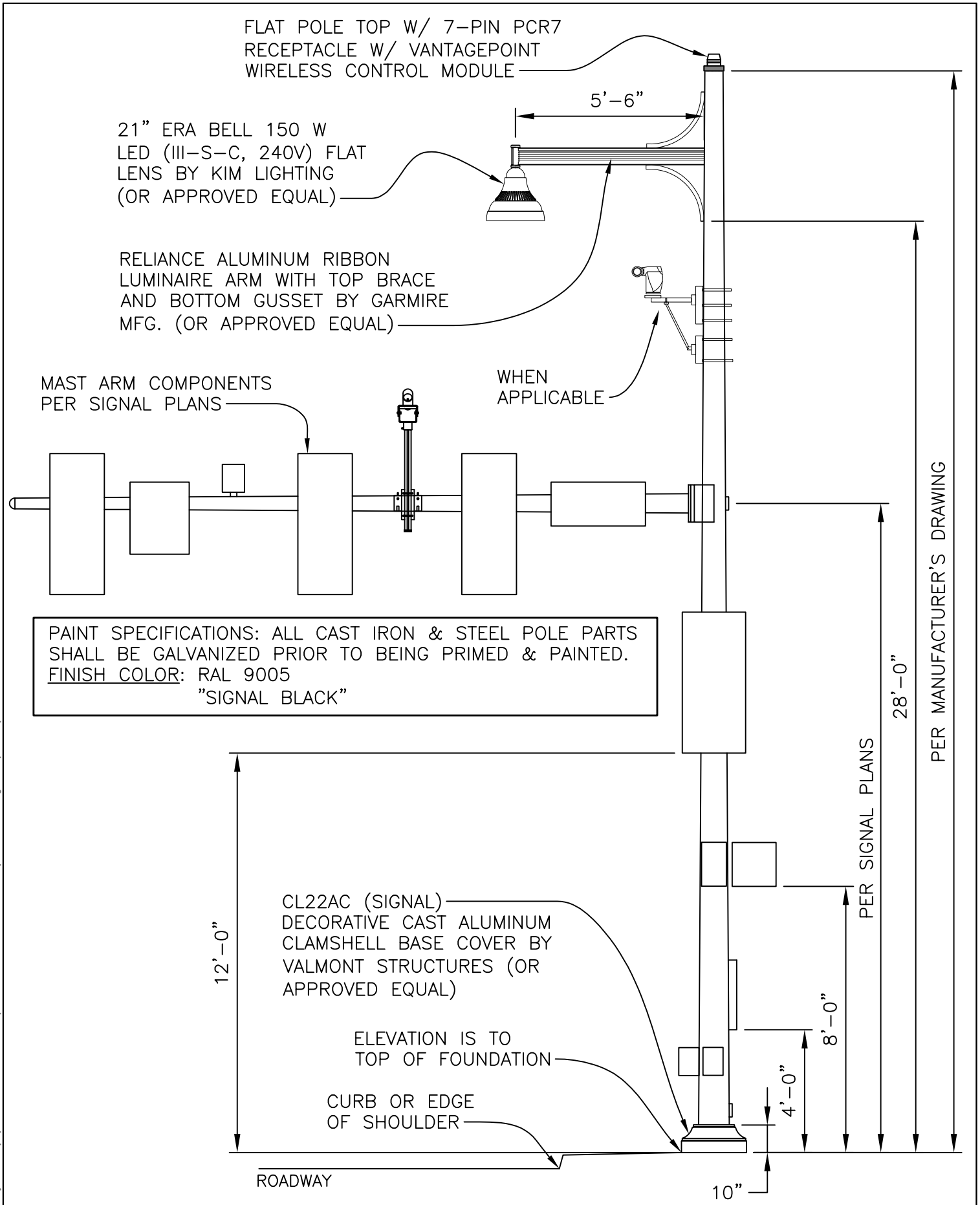


| | | |
|---|---|---|
| APPROVED BY CITY ENGINEER: Jacob Jewelling DATE: 1/17/2022 | CITY OF AUBURN WASHINGTON | DOWNTOWN DECORATIVE TYPE III COMBO LIGHTING & MAST ARM SIGNAL |
| PUBLIC WORKS DEPARTMENT | | STANDARD DETAIL: T-38.3 |

Plotted by: Craig Dobyns on 1/6/2022 File location: M:\Construction Standard Details\Current Working DWG\Traffic\STDETL-T-38.3

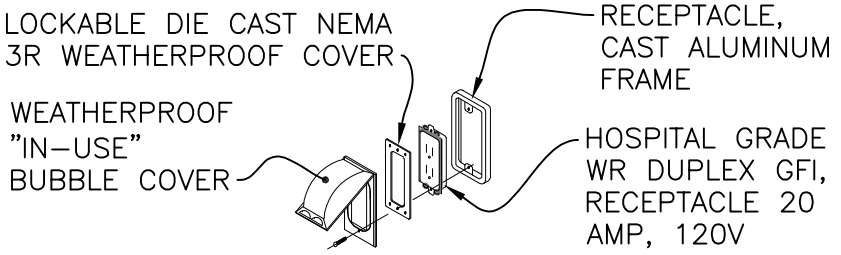


**POLE RECEPTACLE**
NOT TO SCALE

PAINT SPECIFICATIONS: ALL CAST IRON AND STEEL POLE PARTS SHALL BE GALVANIZED PRIOR TO BEING PRIMED AND PAINTED.
FINISH COLOR: RAL 9005 "SIGNAL BLACK"

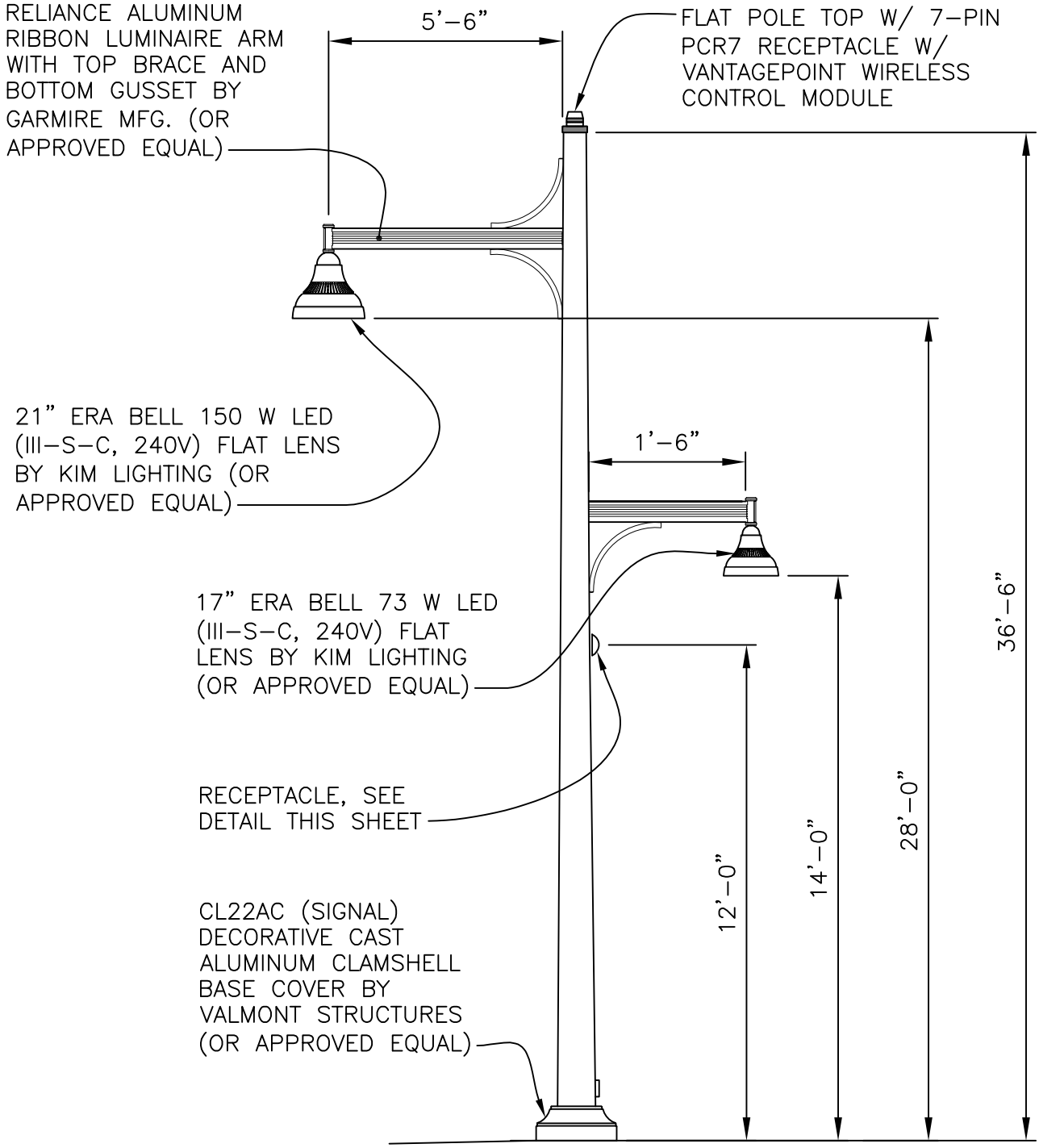


**TALL DECORATIVE POLE**
NOT TO SCALE

| APPROVED BY CITY ENGINEER: Jacob Jewelling | DATE: 1/17/2022 | CITY OF AUBURN WASHINGTON | DOWNTOWN DECORATIVE LIGHT POLE |
|---|---|---|---|
| PUBLIC WORKS DEPARTMENT | | | STANDARD DETAIL: T-39.3 |

Plotted by: Craig Dobyns on 1/6/2022 File location: M:\Construction Standard Details\Current Working DWG\Traffic\STDETL-T-39.3

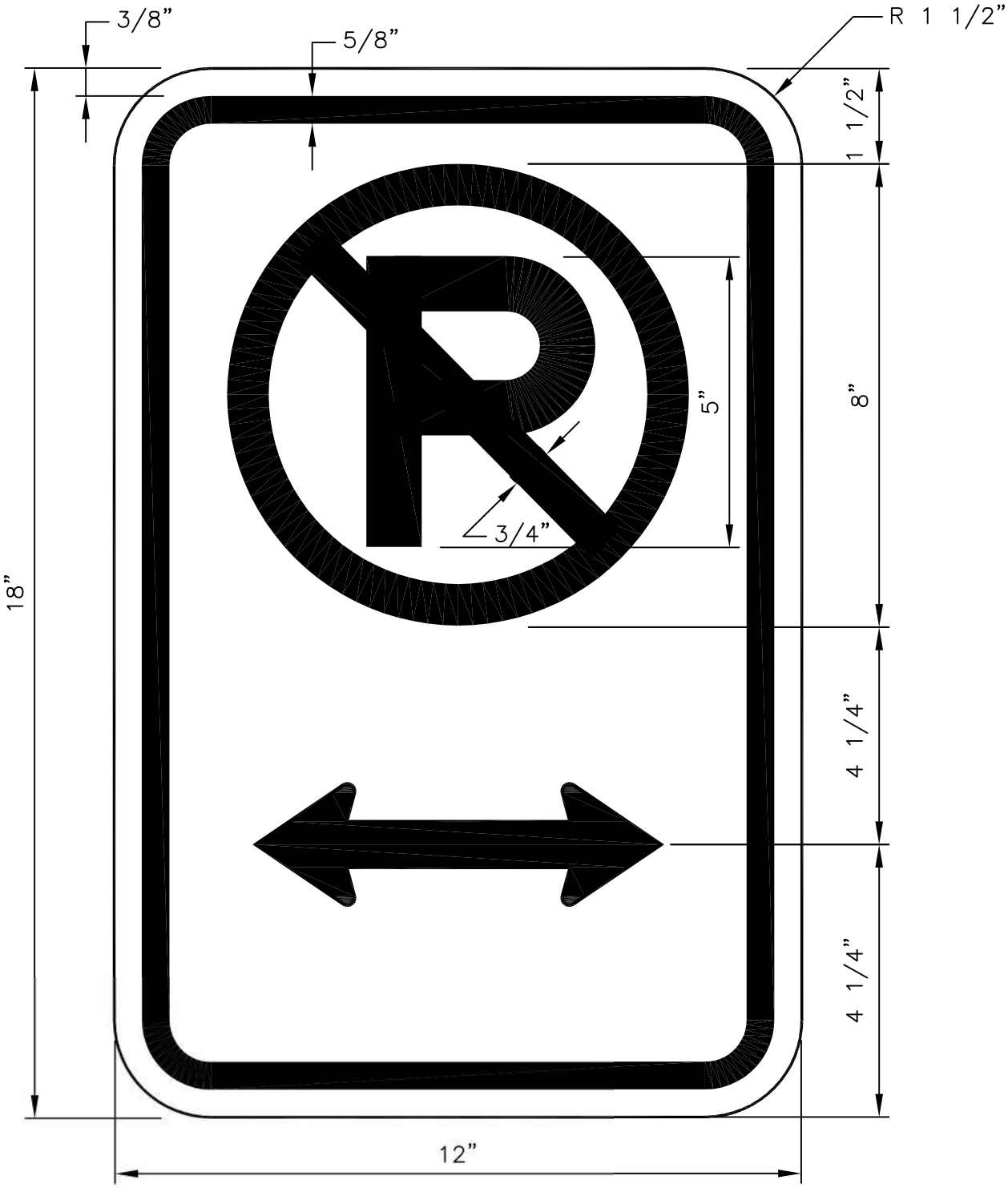


COLORS:

| | | |
|---|---|---|
| LEGEND, CIRCLE, DIAGONAL, BORDER, & ARROW* | – | RED (RETROREFLECTIVE) |
| SYMBOL | – | BLACK |
| BACKGROUND | – | WHITE (RETROREFLECTIVE) |

* USE SINGLE ARROW LEFT OR RIGHT AS APPROPRIATE

| | | | |
|---|---|---|---|
| APPROVED BY CITY ENGINEER: | DATE: 01/05/2021 | CITY OF AUBURN WASHINGTON | "NO PARKING" SIGN |
| PUBLIC WORKS DEPARTMENT | | | STANDARD DETAIL: T–40.2 |

Plotted by: Craig Dobyns on 12/31/2020 File location: M:\Construction Standard Details\Current Working DWG\Traffic\STDETL-T-40.2

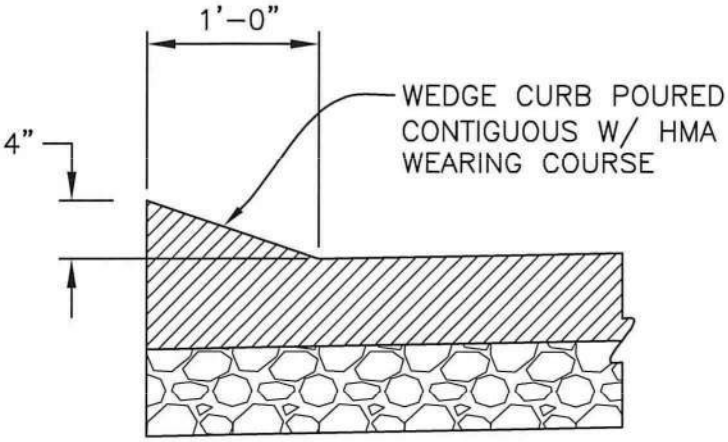


## ASPHALT WEDGE CURB

NTS

A
-

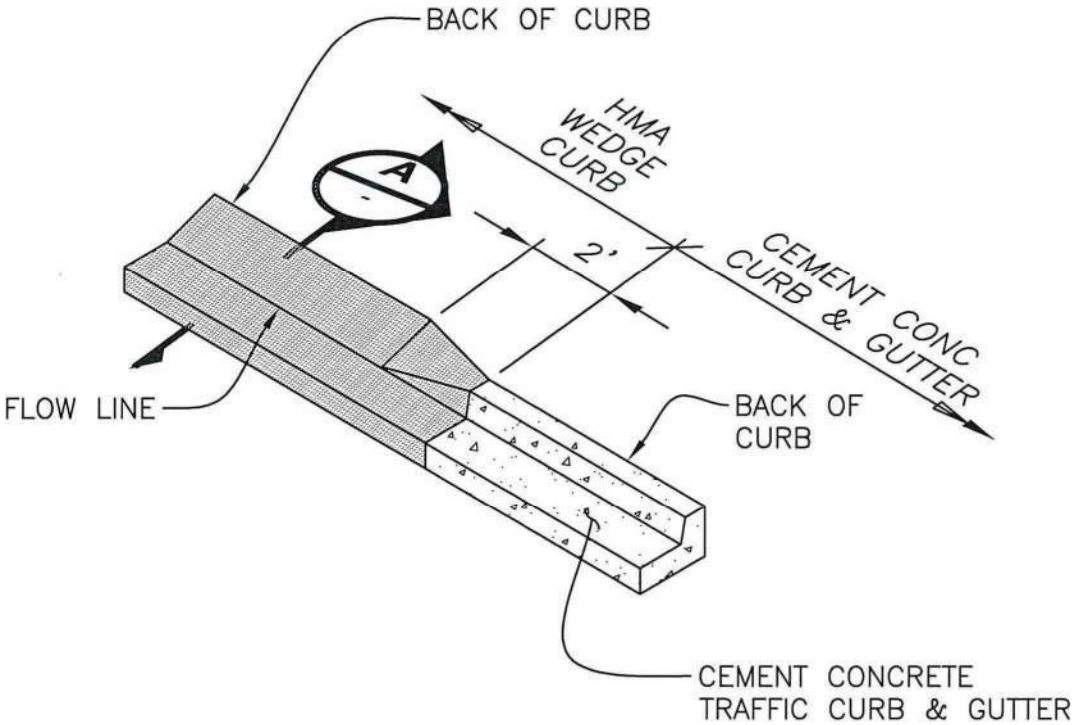


## CONCRETE TRAFFIC CURB & GUTTER TO HMA WEDGE CURB TRANSITION

NTS

B
-

| | | |
|---|---|---|
| APPROVED BY CITY ENGINEER: Jacob Brewting DATE: 12/31/18 | CITY OF AUBURN WASHINGTON | CONCRETE TRAFFIC CURB & GUTTER TO HMA WEDGE CURB TRANSITION |
| PUBLIC WORKS DEPARTMENT | | STANDARD DETAIL: T-41.1 |

Plotted by: Craig Dobyns on 12/31/2018 File location: W:\Construction Standard Details\Current Working DWG\Traffic\STDETL-T-41.1

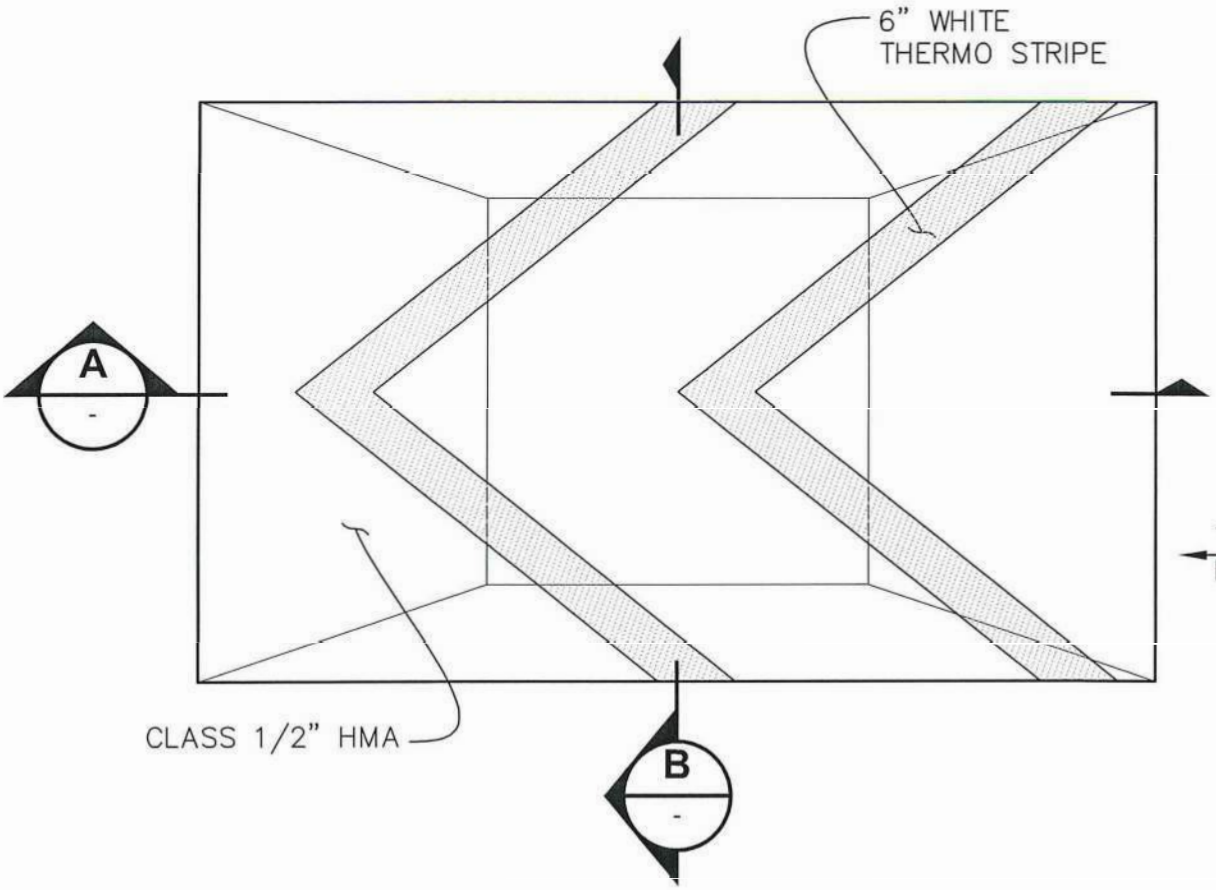


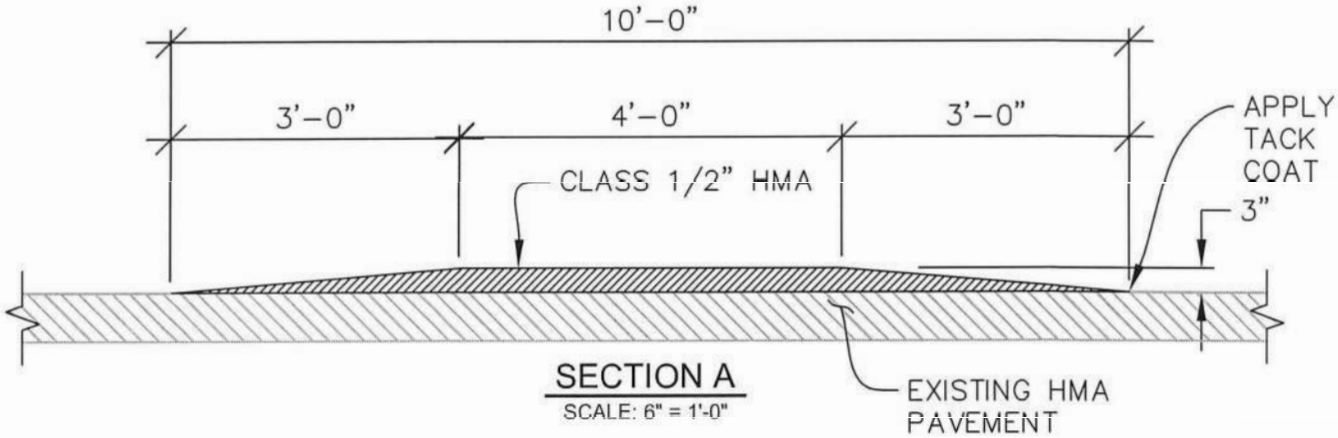


SECTION A
SCALE: 6" = 1'-0"

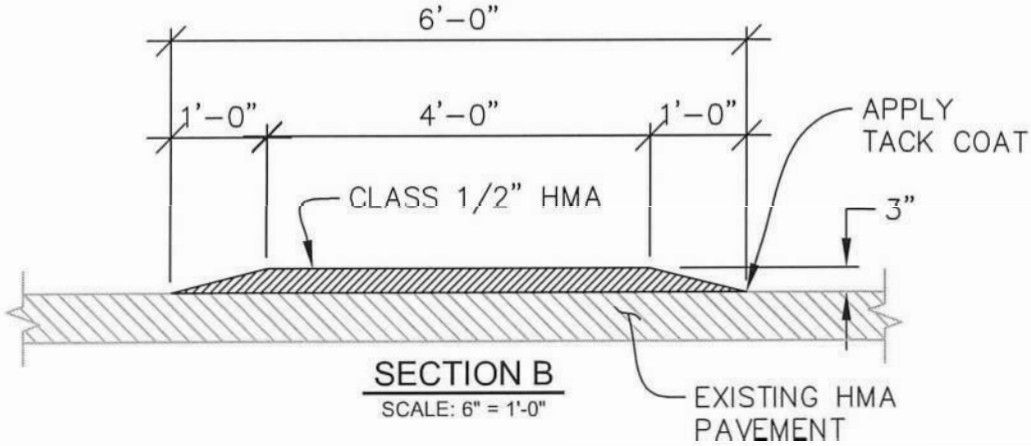


SECTION B
SCALE: 6" = 1'-0"

| | | |
|---|---|---|
| APPROVED BY CITY ENGINEER: Jacob Fleming DATE: 12/20/19 | CITY OF AUBURN WASHINGTON | SPEED CUSHION DETAIL |
| PUBLIC WORKS DEPARTMENT | | STANDARD DETAIL: T-42.1 |

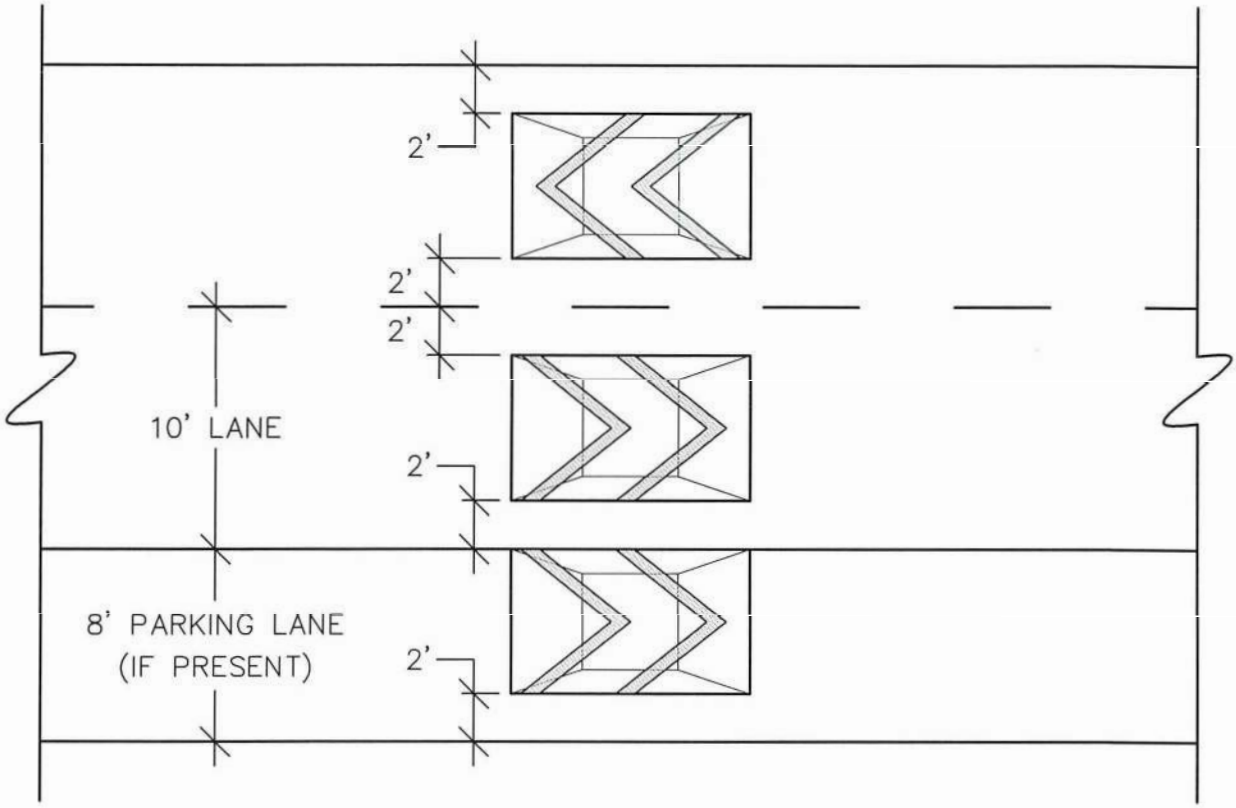


## 28' ROADWAY

SCALE: 6" = 1'-0"

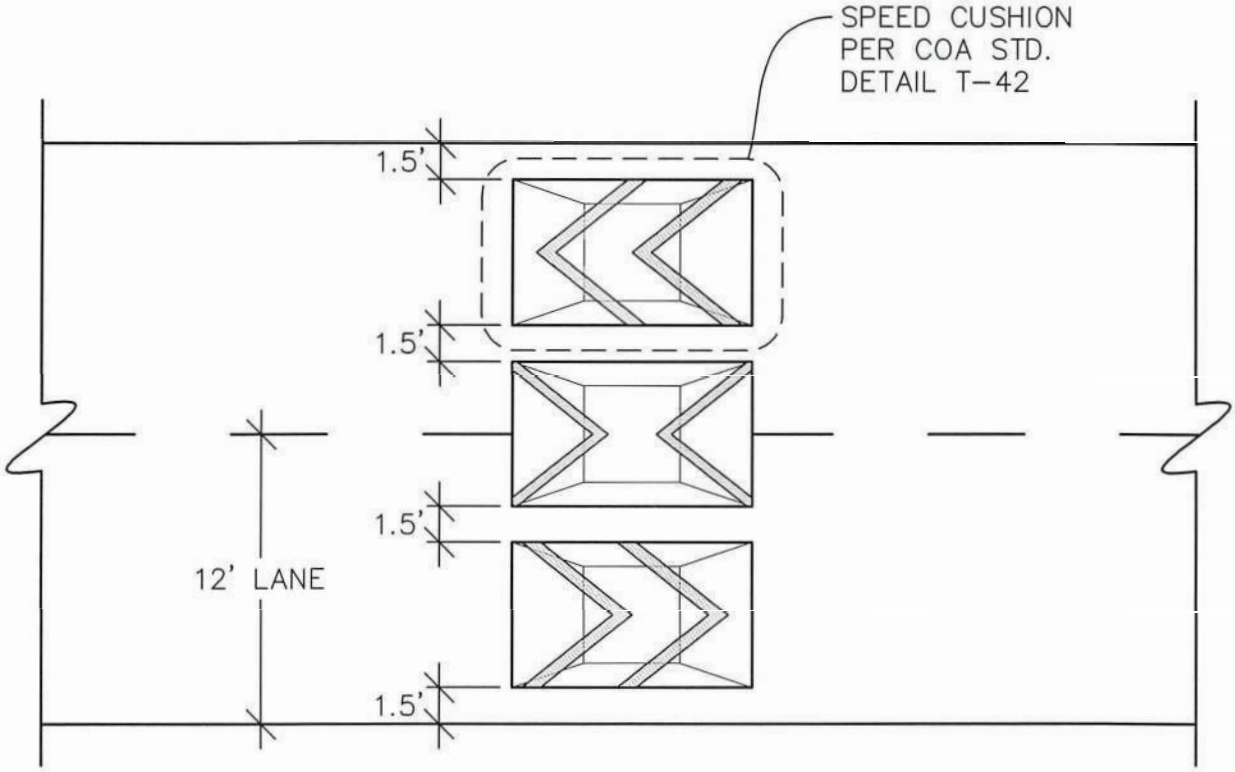


## 24' ROADWAY

SCALE: 6" = 1'-0"

| | | | |
|---|---|---|---|
| APPROVED BY CITY ENGINEER: Jacob Fuerling | DATE: 12/26/19 | CITY OF AUBURN WASHINGTON | SPEED CUSHION PLAN |
| PUBLIC WORKS DEPARTMENT | | | STANDARD DETAIL: T-42A.1 |

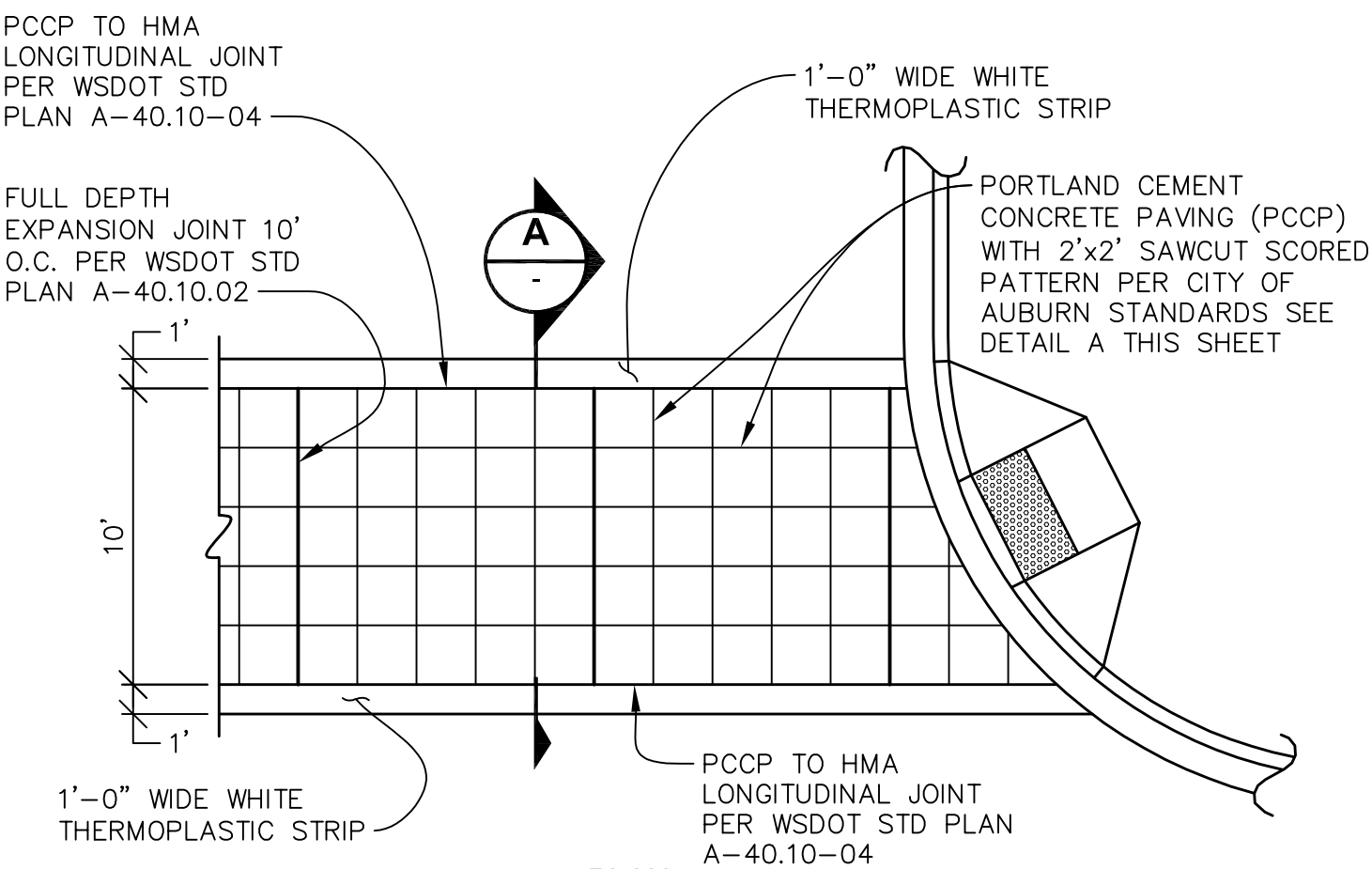


PLAN

SCALE: 6" = 1'-0"

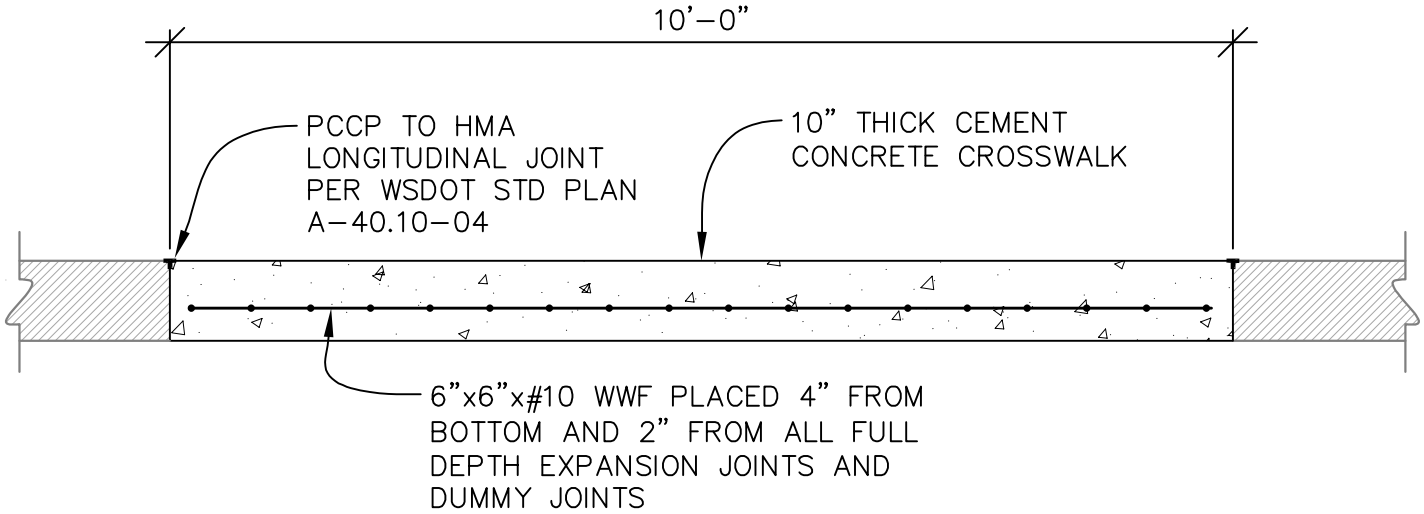


SECTION A

SCALE: 6" = 1'-0"

| APPROVED BY CITY ENGINEER: | DATE: | CITY OF AUBURN WASHINGTON | DOWNTOWN PEDESTRIAN CROSSWALK |
|---|---|---|---|
| Jacob Jewett | 1/17/2022 | | |
| PUBLIC WORKS DEPARTMENT | | | STANDARD DETAIL: T-43.2 |

Plotted by: Craig Dobyns on 1/6/2022 File location: M:\Construction Standard Details\Current Working DWG\Traffic\STDETL-T-43.2

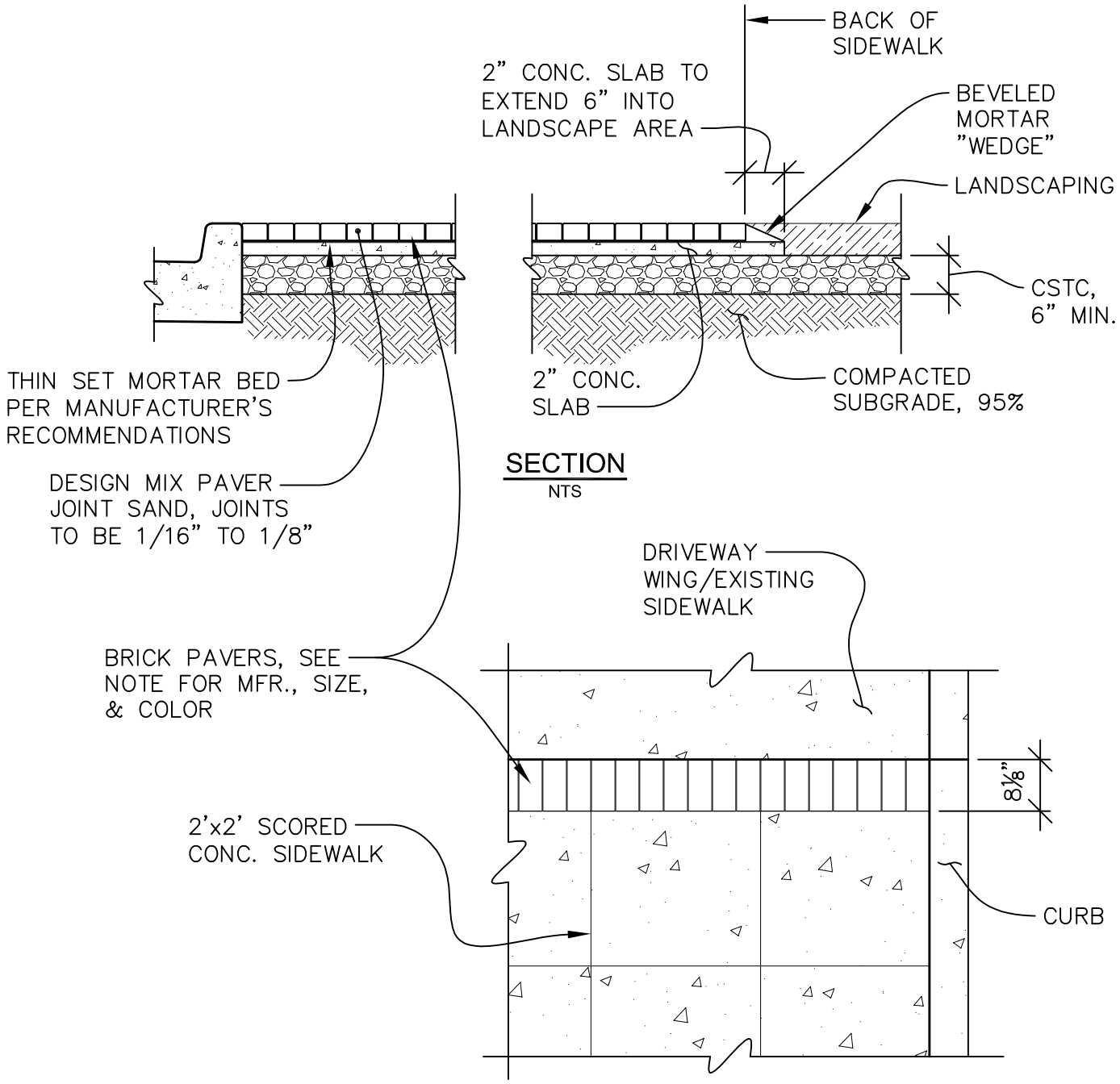


**NOTE:**
BRICKS TO BE MORTAR SET, ONE ROW STACK PATTERN, HOLLAND 6CM PAVERS BY MUTUAL MATERIALS.
COLOR: RED RUSTIC BLEND
SIZE: 2⅜"x7⅞"x3¹⁵⁄₁₆" (60x200x100 mm)

| APPROVED BY CITY ENGINEER: | DATE: | CITY OF AUBURN WASHINGTON | DOWNTOWN BRICK PAVER BAND |
|---|---|---|---|
| Jacob Jewelling | 02/09/2023 | | |
| PUBLIC WORKS DEPARTMENT | | | STANDARD DETAIL: T-44.3 |

Plotted by: Craig Dobyns on 2/6/2023 File location: M:\Construction Standard Details\Current Working DWG\Traffic\STDETL-T-44.3

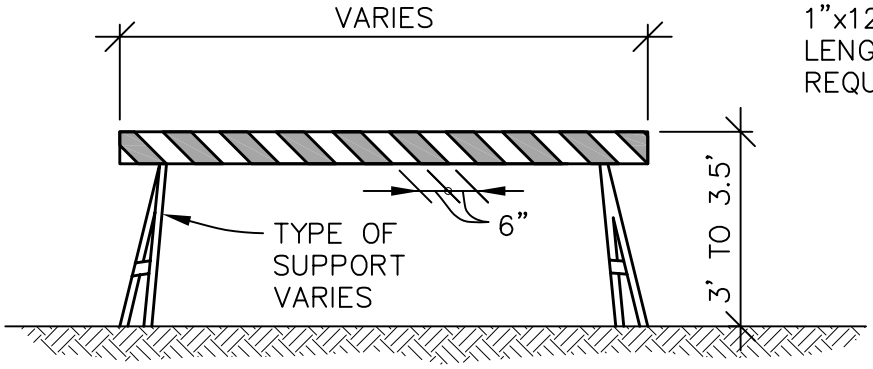


TYPE I BARRICADE

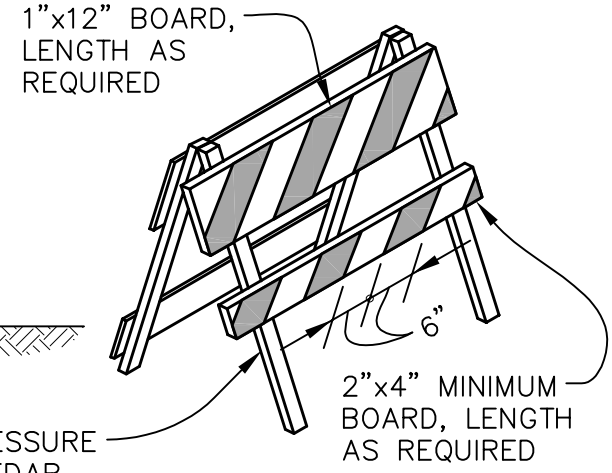


TYPE II BARRICADE

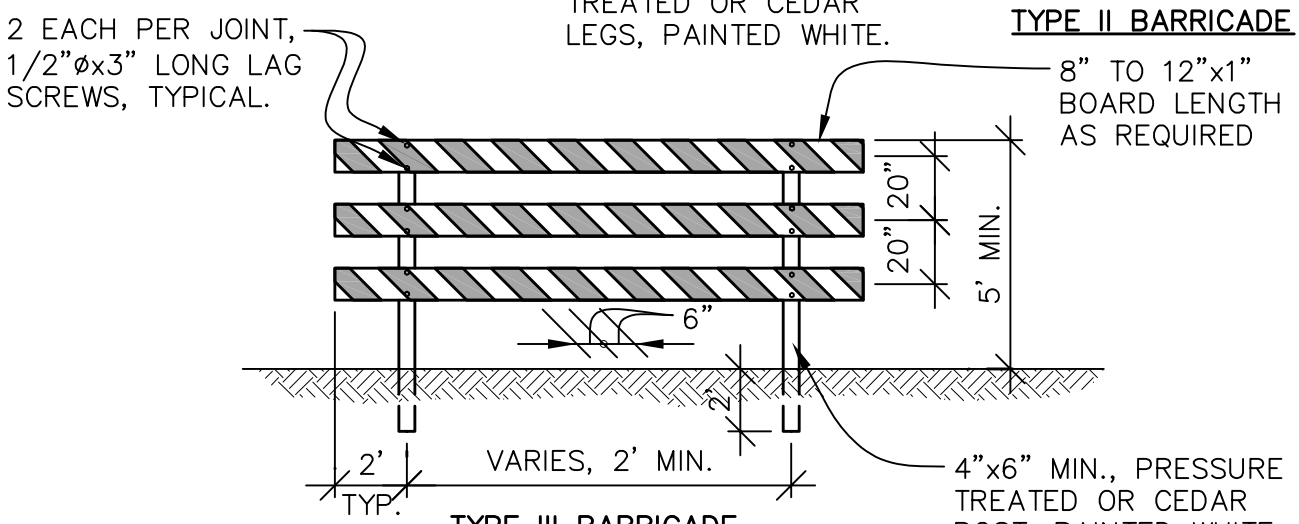


TYPE III BARRICADE
(Fixed–Permanent)

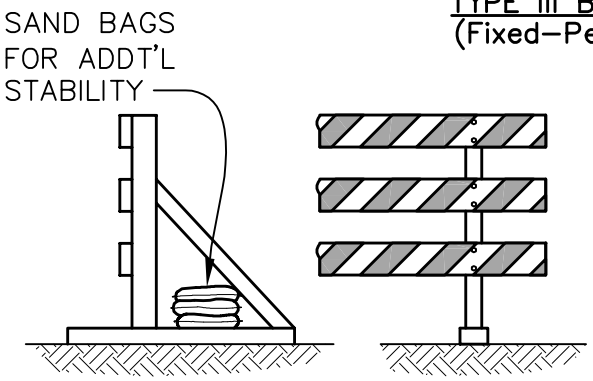


TYPE III BARRICADE
(Movable–Temporary)

| BARRICADE DIMENSIONS | | | |
|---|---|---|---|
| TYPE | I | II | III |
| RAIL WIDTH | 8" MIN. 12" MAX. | 8" MIN. 12" MAX. | 8" MIN. 12" MAX. |
| RAIL LENGTH | 2' MIN. | 2' MIN. | 4' MIN. |
| RAIL HEIGHT | 3' MIN. | 3' MIN. | 5' MIN. |
| FRAME TYPE | DEMOUNTABLE OR HEAVY "A" | LIGHT "A" FRAME | POST OR SKIDS |
| APPLICATION | MOVEABLE | PORTABLE | MOVEABLE OR PERMANENT |

**NOTES:**

1. TEMPORARY BARRICADE SHALL HAVE ORANGE AND WHITE STRIPE, PERMANENT BARRICADE SHALL HAVE RED AND WHITE REFLECTORIZED PAINT.
2. STRIPES SHALL BE SLANTED DOWNWARD AT 45° ANGLE AND IN THE DIRECTION OF THE SIDE TO PASS. THEY WILL BE SLANTED IN BOTH DIRECTIONS FROM THE MIDDLE IF TRAFFIC PASSES AROUND BOTH ENDS.
3. STRIPE WIDTH SHALL BE 6", 4" IF RAILS ARE LESS THAN 3' LONG.
4. SEE TABLE FOR BARRICADE DIMENSIONS.
5. FABRICATION PER MUTCD SECTION 6C.

| APPROVED BY CITY ENGINEER: Jacob Jewett | DATE: 1/17/2022 | CITY OF AUBURN WASHINGTON | TYPICAL TRAFFIC BARRICADES |
|---|---|---|---|
| PUBLIC WORKS DEPARTMENT | | | STANDARD DETAIL: T–45.2 |

Plotted by: Craig Dobyns on 1/6/2022 File location: M:\Construction Standard Details\Current Working DWG\Traffic\STDETL-T-45.2

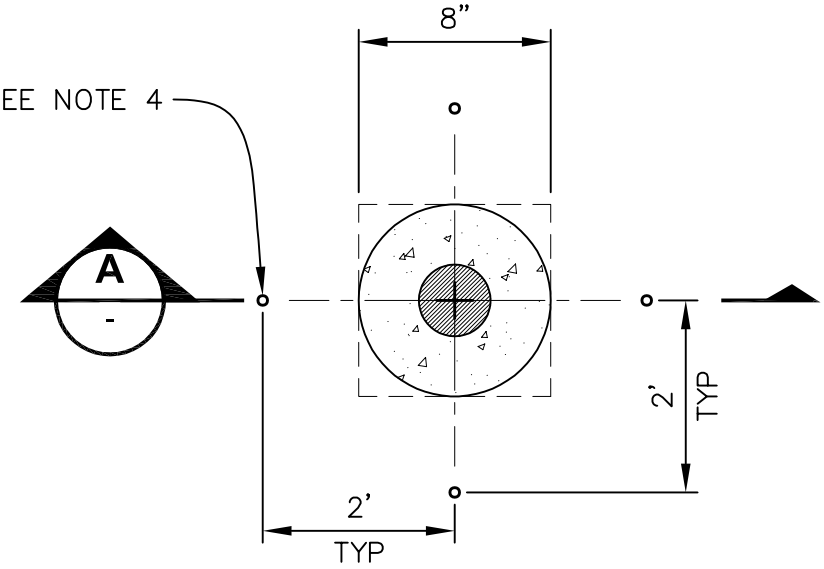


PLAN
NTS

NOTE:
BRASS DISC MAY BE DOMED OR FLAT

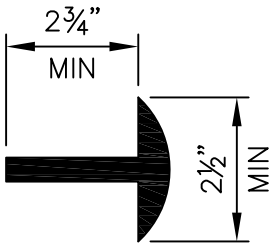


BRASS DISC
NTS

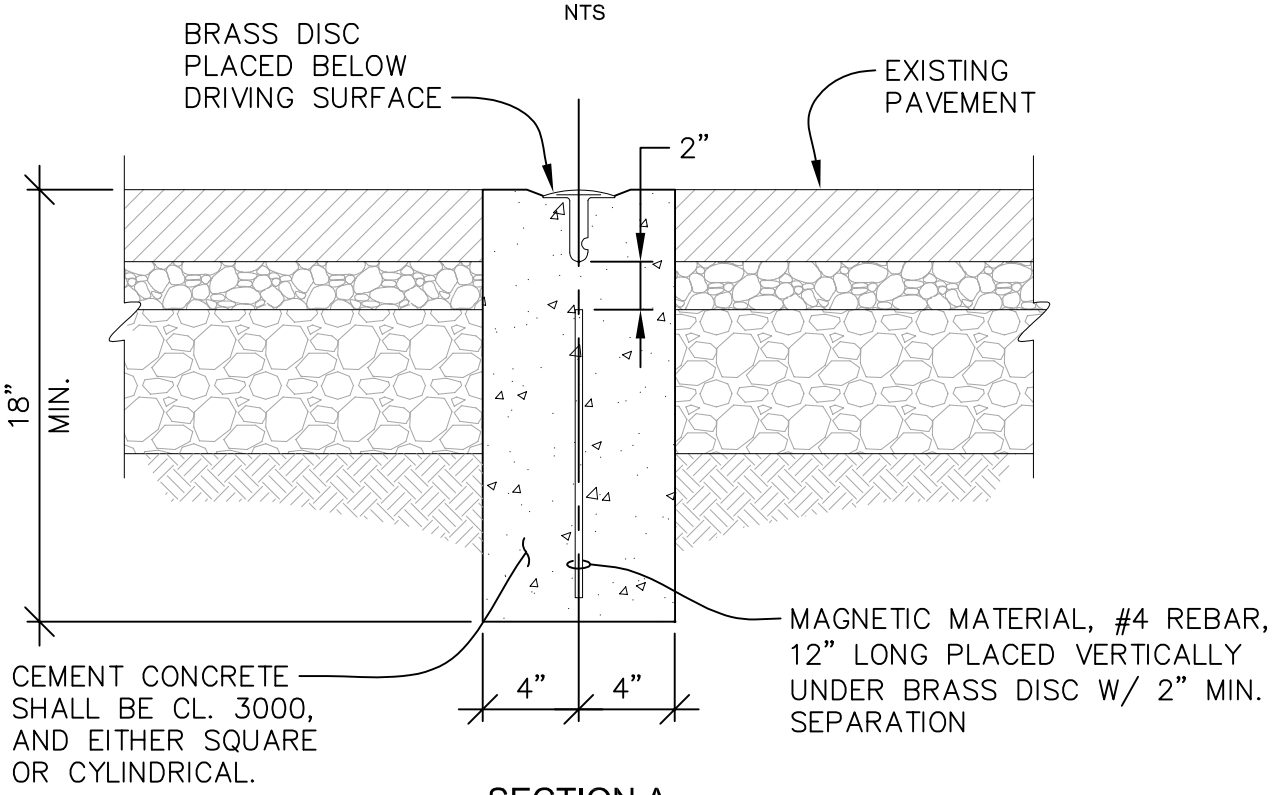


SECTION A
NTS

**NOTES:**

1. THIS TYPE MAY BE USED ON ALL CITY STREETS EXCEPT FOR SR–164 WHERE MONUMENT SHALL BE INSTALLED PER WSDOT STANDARD PLAN A–10.30–00.
2. BRASS DISC SHALL BE MARKED BY AN "X" AT THE INTERSECT LOCATION AND MARKED PER RCW 58.09.120.
3. THE REQUIREMENTS OF WAC 332–120 SHALL BE MET PRIOR TO AND FOR THE REMOVAL OR DESTRUCTION OF A SURVEY MONUMENT.
4. PK NAIL STRADDLES WHICH ARE A STRAIGHT LINE INTERSECTION OF MONUMENT INTERSECT LOCATION.

| APPROVED BY CITY ENGINEER: Jacob Freeding | DATE: 02/09/2023 | CITY OF AUBURN WASHINGTON | POURED IN PLACE MONUMENT TYPE A MODIFIED |
|---|---|---|---|
| PUBLIC WORKS DEPARTMENT | | | STANDARD DETAIL: T–46.3 |

Plotted by: Craig Dobyns on 2/8/2023 File location: M:\Construction Standard Details\Current Working DWG\Traffic\STDETL-T-46.3

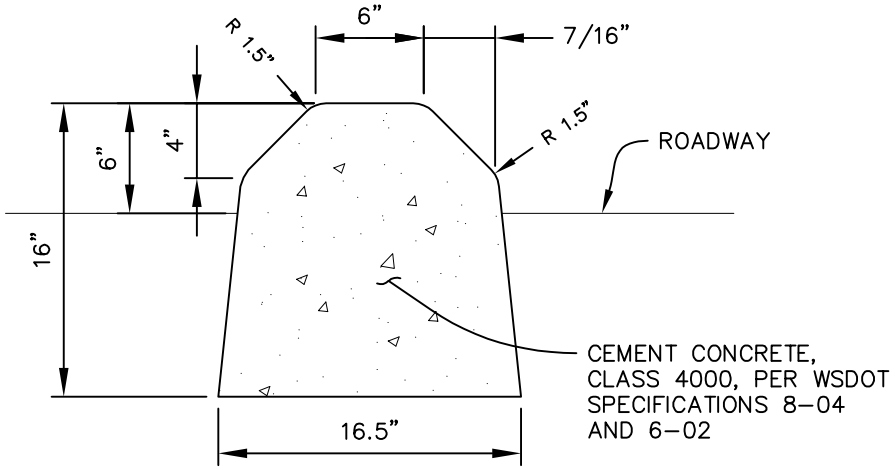


# CAST-IN-PLACE DUAL-FACED MOUNTABLE CEMENT CONCRETE TRAFFIC CURB

NTS

| | | | |
|---|---|---|---|
| APPROVED BY CITY ENGINEER: | DATE: 01/05/2021 | CITY OF AUBURN WASHINGTON | CAST-IN-PLACE DUAL MOUNTABLE CEMENT CONCRETE TRAFFIC CURB |
| PUBLIC WORKS DEPARTMENT | | | STANDARD DETAIL: T-47.1 |

Plotted by: Craig Dobyns on 12/10/2020 File location: M:\Construction Standard Details\Current Working DWG\Traffic\STDETL-T-47.1

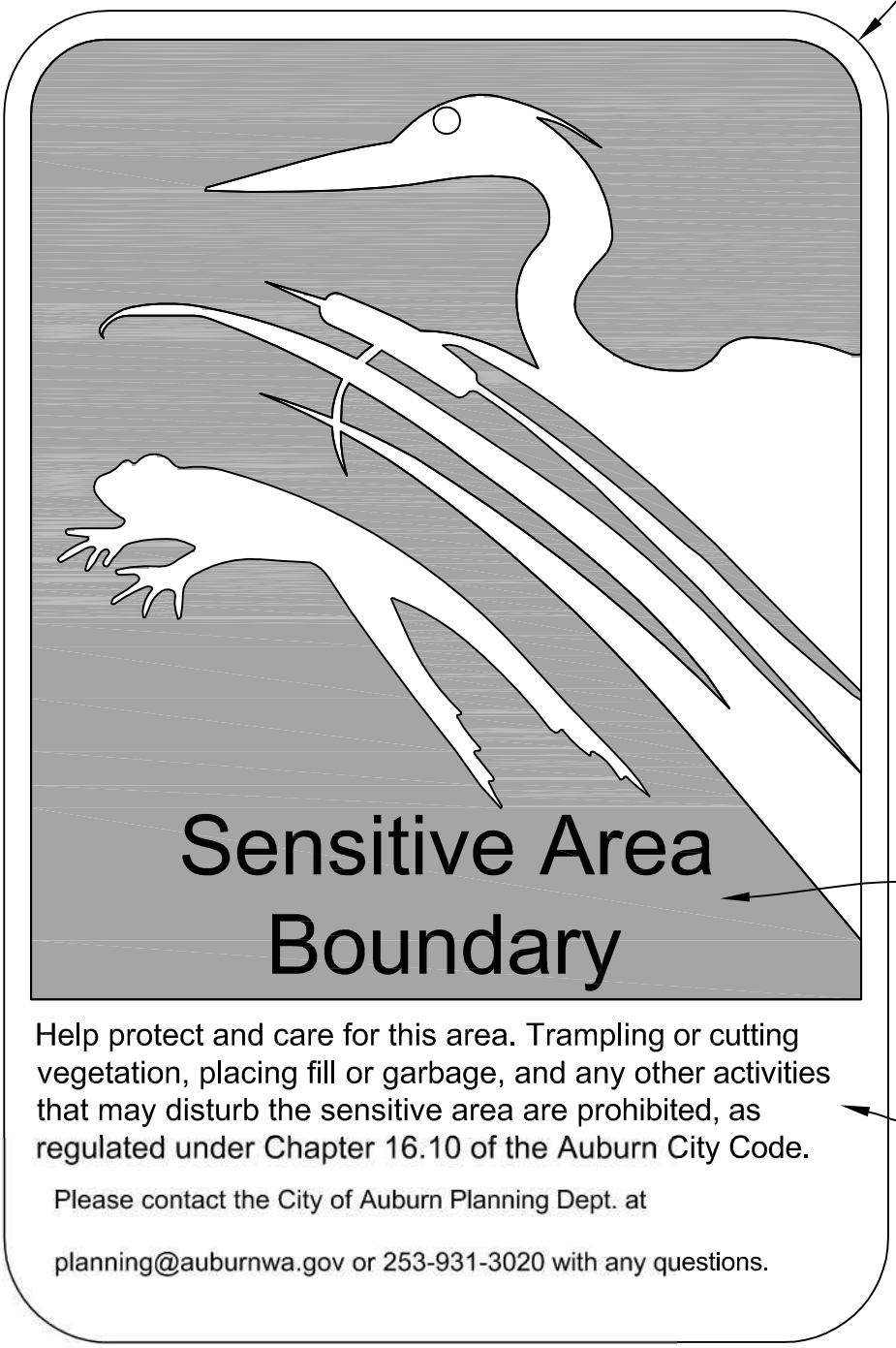


SIGN FACE IS DIGITALLY PRINTED TEAL C:100 M:0 Y:30 K:6 AND BLACK C:100 M:100 Y:100 K:100 ON 3 MIL. CALANDERED WHITE VINYL THEN LAMINATED WITH A 2.5 MIL. LAMINATE. THIS SIGN FACE IS THEN MOUNTED TO .080" THICK 5052 H38 ANODIZED ALUMINUM.

**CITY OF AUBURN**
**SENSITIVE AREA SIGN**
**COMMERCIAL AQUATIC**

NTS

| APPROVED BY CITY ENGINEER: | DATE: | | SENSITIVE AREA SIGN COMMERCIAL AQUATIC |
|---|---|---|---|
| Jacob Sweeting | 01/05/2021 | CITY OF AUBURN WASHINGTON | |
| PUBLIC WORKS DEPARTMENT | | | STANDARD DETAIL: T-48.1 |

Plotted by: Craig Dobyns on 12/16/2020 File location: M:\Construction Standard Details\Current Working DWG\Traffic\STDETL-T-48.1

NOTES:

1. ALL CAST IRON AND STEEL POLE PARTS SHALL BE GALVANIZED PRIOR TO BEING PRIMED AND PAINTED. FINISH COLOR: RAL 9005 "SIGNAL BLACK".

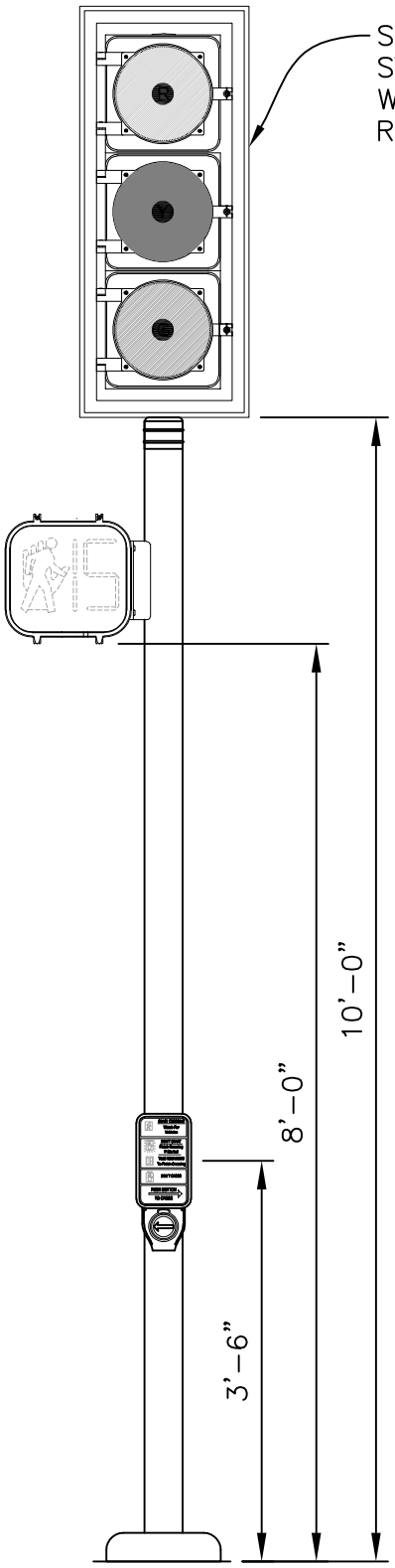


DECORATIVE TYPE 1 PPB ASSEMBLY (WITH SIGNAL HEAD)
NOT TO SCALE

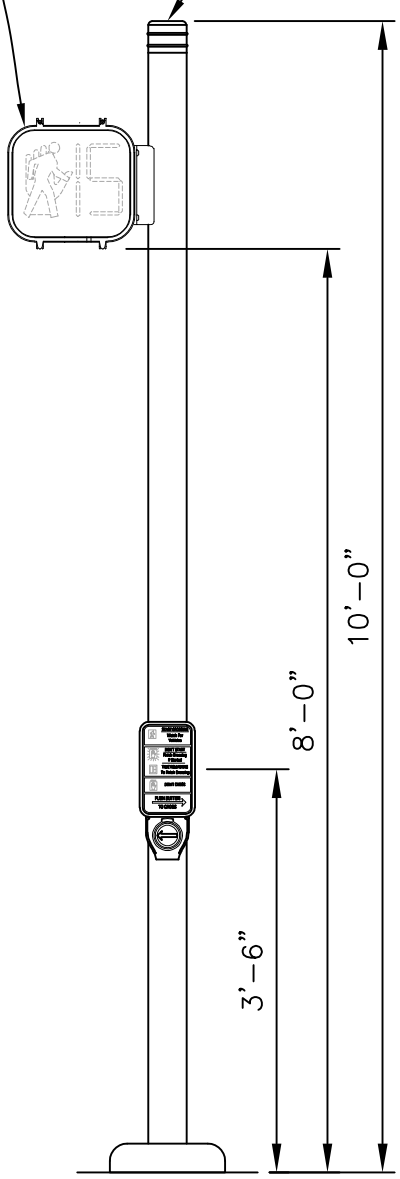


DECORATIVE TYPE 1 ASSEMBLY
NOT TO SCALE

KIM PARTS:
POLE CAP: 17095-1-BL-P OR APPROVED EQUIVALENT

BASE COVER: BC4RABL OR APPROVED EQUIVALENT

PLATE SIZE: 1/2" ASTM A-36
BASE PLATE: 11-1/4" O.D ROUND
BOLT CIRCLE: 7"
BOLT HOLES: 3/4"

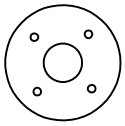

BASE PLATE
NOT TO SCALE

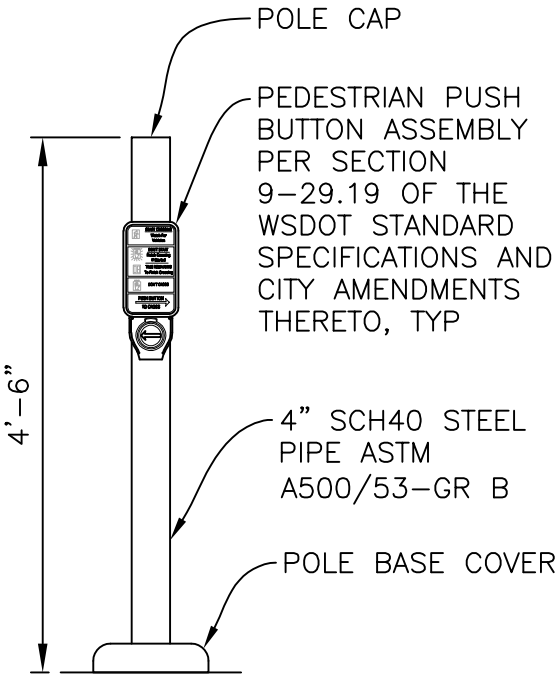


DECORATIVE TYPE 1 PPB POST
NOT TO SCALE

| APPROVED BY CITY ENGINEER: | DATE: | CITY OF AUBURN WASHINGTON | DOWNTOWN PEDESTRIAN PUSH BUTTON STANDARDS |
|---|---|---|---|
| Jacob Jewett | 1/17/2022 | | |
| PUBLIC WORKS DEPARTMENT | | | STANDARD DETAIL: T-49.1 |

Plotted by: Craig Dobyns on 1/6/2022 File location: M:\Construction Standard Details\Current Working DWG\Traffic\STDETL-T-49.1

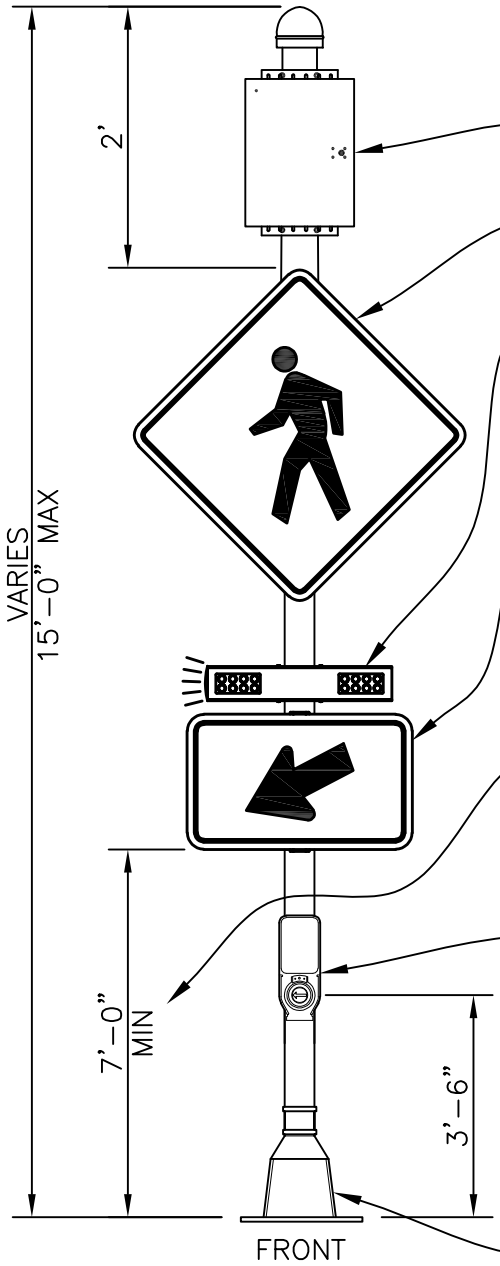


RRFB CONTROL BOX (WHEN SHOWN ON PLANS)

TWO SIGNS MOUNTED BACK TO BACK

TWO RRFB LIGHT BARS W/ PEDESTRIAN CONFIRMATION LIGHT MOUNTED BACK TO BACK (SEE STD DTL T-50b, NOTE 3)

W16-7PL AND W16-7PR 12"x24" TWO SIGNS MOUNTED BACK TO BACK, (ARROW SHALL POINT TO CROSSWALK)

HEIGHT SHALL BE SUCH THAT BEACON VISIBILITY TO VEHICLES IS NOT BLOCKED BY SIGNAGE OR OTHER ROADSIDE FEATURES

APS PUSHBUTTON ASSEMBLY TACTILE ARROW ON BUTTON SHALL POINT TO CROSSWALK, LOCATION TO BE COORDINATED IN THE FIELD WITH ENGINEER

PELCO OR EQUIV. BREAKAWAY BASE (SEE STD DTL T-50b, NOTE 4)

## RRFB ASSEMBLY

N.T.S.

R1-5B
(ONLY AT MULTI-LANE CROSSINGS WHERE STOP BARS ARE INSTALLED)

**NOTE:**
CROSSINGS AT MID-BLOCK/NON-INTERSECTION LOCATIONS SHALL INCLUDE THERMOPLASTIC STOP BARS.

W11-15 (30"x30")
or
(36"x36")

(TRAIL CROSSINGS)

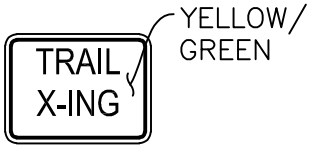


W11-15P (24"x18")

(WHERE CONNECTING TRAIL IS NOT ALIGNED ALONG ROADWAY)

S1-1
(30"x30")
or
(36"x36")

(SCHOOL CROSSINGS)

W11-2
(30"x30")
or
(36"x36")

(STANDARD CROSSINGS)

SIGN TYPE AND SIZE AS NOTED IN THE PLANS

## SIGNING OPTIONS

N.T.S.

| APPROVED BY CITY ENGINEER: | DATE: | CITY OF AUBURN WASHINGTON | RRFB AND ADVANCED WARNING ASSEMBLY DETAILS |
|---|---|---|---|
| Jacob Sweeting | 02/09/2023 | | |
| PUBLIC WORKS DEPARTMENT | | | STANDARD DETAIL: T-50a.1 |

Plotted by: Craig Dobyns on 2/8/2023 File location: M:\Construction Standard Details\Current Working DWG\Traffic\STDETL-T-50a.1

FRONT

## ADVANCE WARNING BEACON ASSEMBLY

N.T.S.

### GENERAL NOTES:

1. INSTALL RECTANGULAR RAPID FLASHING BEACON (RRFB) TYPE 1 ASSEMBLY ON 4" DIA. ALUMINUM POLE. RRFB ASSEMBLY SHALL BE INSTALLED ON EACH SIDE (EXCEPT WHEN SHOWN OTHERWISE ON THE PLANS).

2. INSTALL ADVANCED WARNING BEACON ASSEMBLY ON 4" DIA. ALUMINUM POLE ONE PER EACH SIDE OF THE STREET, INCLUDING ALL NECESSARY HARDWARE WHEN SHOWN ON THE PLANS.

3. RRFB WILL BE APPROXIMATELY 5 INCHES WIDE BY 2 INCHES HIGH, WITH A MINIMUM OF 7 INCHES BETWEEN EACH RRFB INDICATOR BOTH SIDES, INCLUDING A PEDESTRIAN CONFIRMATION LIGHT PER EACH SIDE OF THE STREET, INCLUDING ALL NECESSARY HARDWARE.

4. INSTALL CONC. TYPE 1 FOUNDATION PER WSDOT STD PLAN J-21.10-04 WITH PELCO (OR APPROVED EQUIVALENT) BREAKAWAY BASE AND ANCHOR BOLTS. CONTRACTOR TO VERIFY BOLT PATTERN PRIOR TO PLACING CONCRETE.

| APPROVED BY CITY ENGINEER: Jacob Jewetting | DATE: 02/09/2023 | CITY OF AUBURN WASHINGTON | ADVANCED WARNING BEACON & RRFB NOTES |
|---|---|---|---|
| PUBLIC WORKS DEPARTMENT | | | STANDARD DETAIL: T-50b.1 |

Plotted by: Craig Dobyns on 2/8/2023 File location: M:\Construction Standard Details\Current Working DWG\Traffic\STDETL-T-50b.1

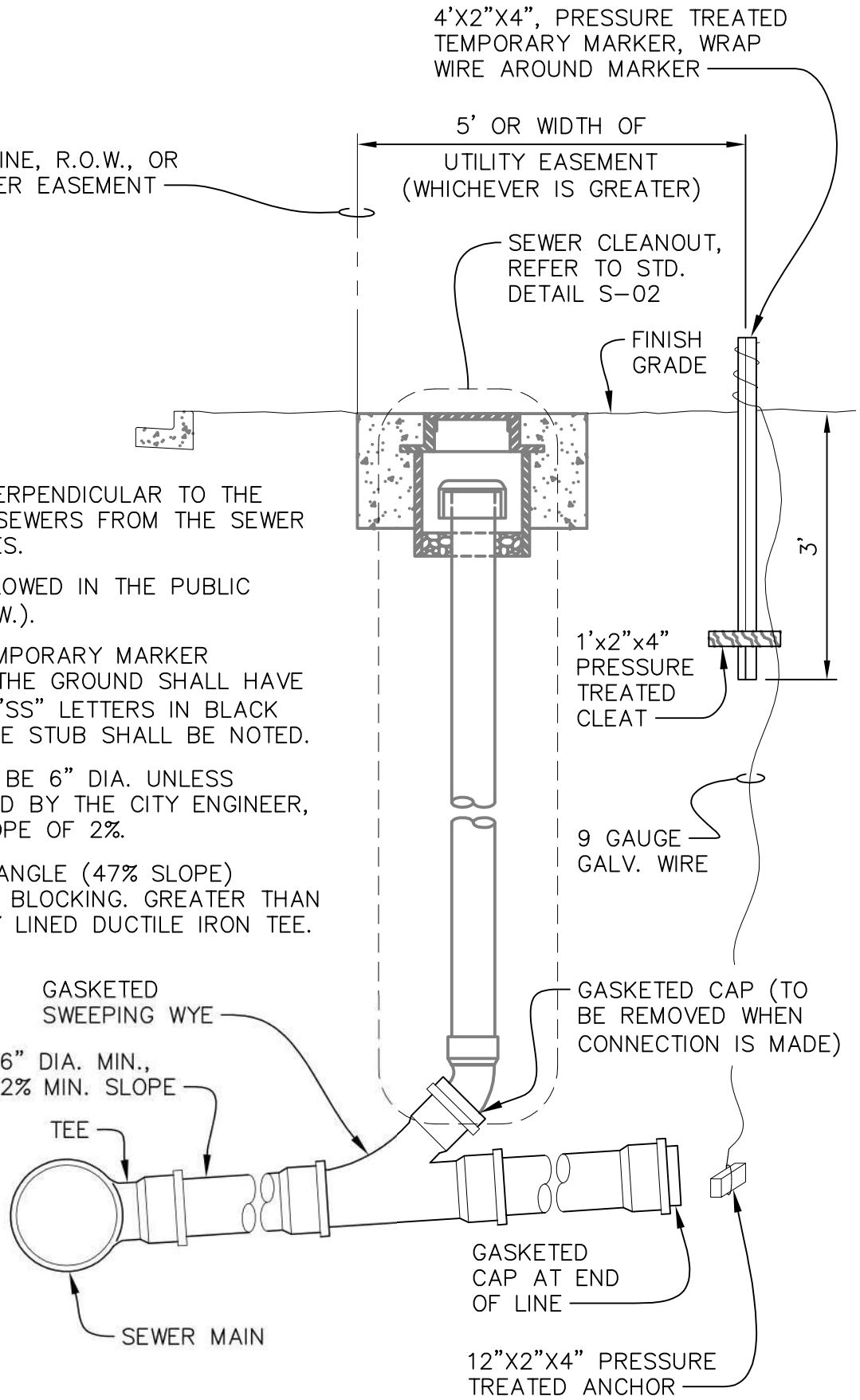


**NOTES:**

1. LAY SIDE SEWERS PERPENDICULAR TO THE MAIN. EXTEND SIDE SEWERS FROM THE SEWER MAIN ONLY WITH TEES.
2. BENDS ARE NOT ALLOWED IN THE PUBLIC RIGHT OF WAY (R.O.W.).
3. PORTION OF THE TEMPORARY MARKER EXTENDING OUT OF THE GROUND SHALL HAVE 2" HIGH STENCILED "SS" LETTERS IN BLACK PAINT, DEPTH TO THE STUB SHALL BE NOTED.
4. SIDE SEWERS SHALL BE 6" DIA. UNLESS OTHERWISE APPROVED BY THE CITY ENGINEER, WITH A MINIMUM SLOPE OF 2%.
5. GREATER THAN 25° ANGLE (47% SLOPE) REQUIRES CONCRETE BLOCKING. GREATER THAN 45° REQUIRES EPOXY LINED DUCTILE IRON TEE.

| | | | |
|---|---|---|---|
| APPROVED BY CITY ENGINEER: Jacob Sweeting | DATE: 01/05/2021 | CITY OF AUBURN WASHINGTON | SIDE SEWER STUB |
| PUBLIC WORKS DEPARTMENT | | | STANDARD DETAIL: S-01.2 |

Plotted by: Craig Dobyns on 12/16/2020 File location: M:\Construction Standard Details\Current Working DWG\Sewer and Storm\STDETL-S-01.2

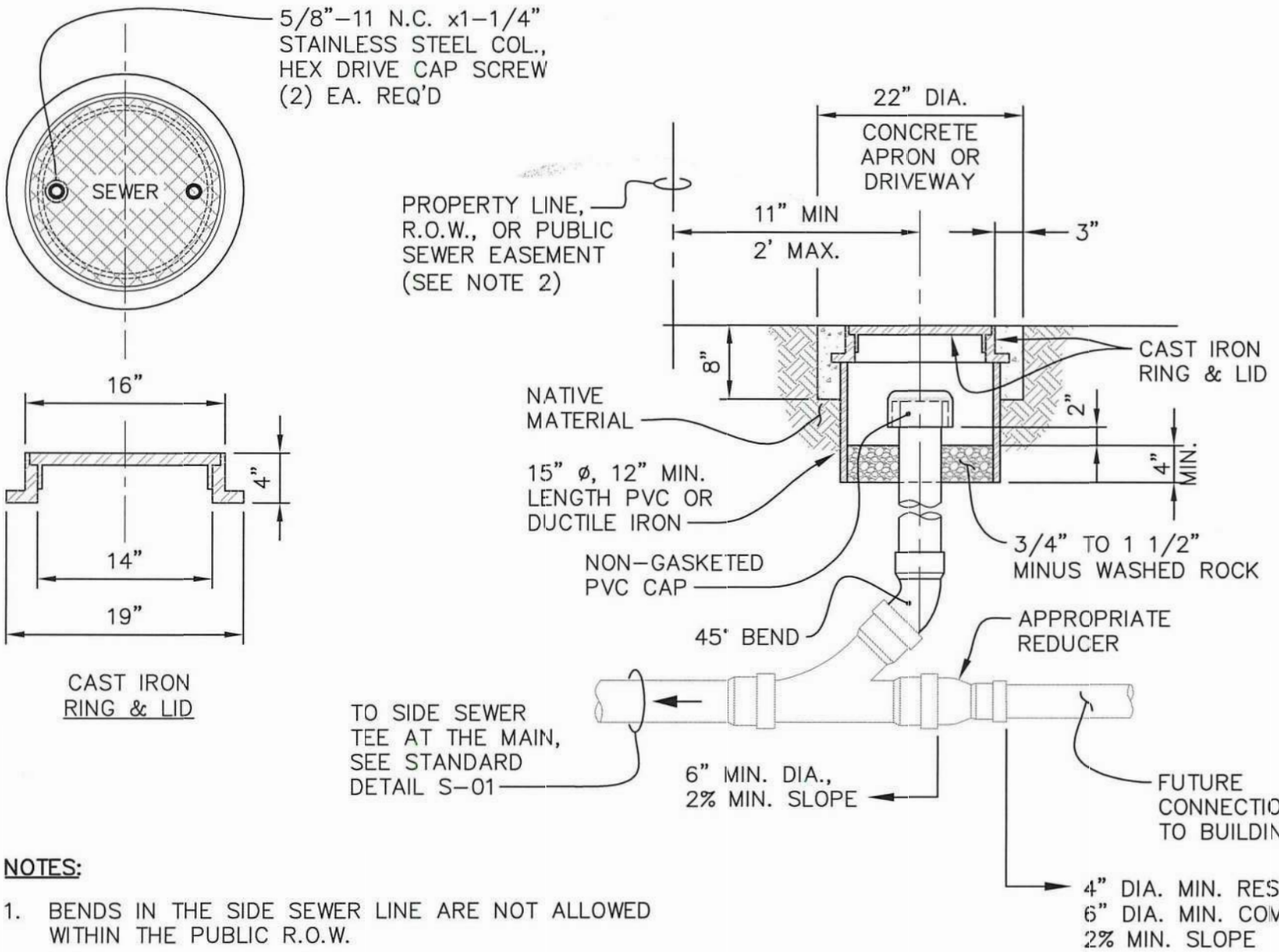


**NOTES:**

1. BENDS IN THE SIDE SEWER LINE ARE NOT ALLOWED WITHIN THE PUBLIC R.O.W.
2. CLEAN OUTS MAY BE ESTABLISHED ON BACKSIDE OF UTILITY EASEMENTS IF APPROVED BY CITY ENGINEER.
3. ADDITIONAL CLEAN OUTS ARE REQUIRED ON SIDE SEWER LINE WITHIN PRIVATE PROPERTY WHEN CUMULATIVE BENDS ON SIDE SEWER LINE EQUALS OR EXCEEDS 135°

APPROVED BY CITY ENGINEER: Shel Gas

DATE: 1/31/2017

CITY OF AUBURN WASHINGTON

COMMUNITY DEVELOPMENT & PUBLIC WORKS DEPT.

PRIVATE SANITARY SIDE SEWER CLEAN OUT

STANDARD DETAIL: S-02.2

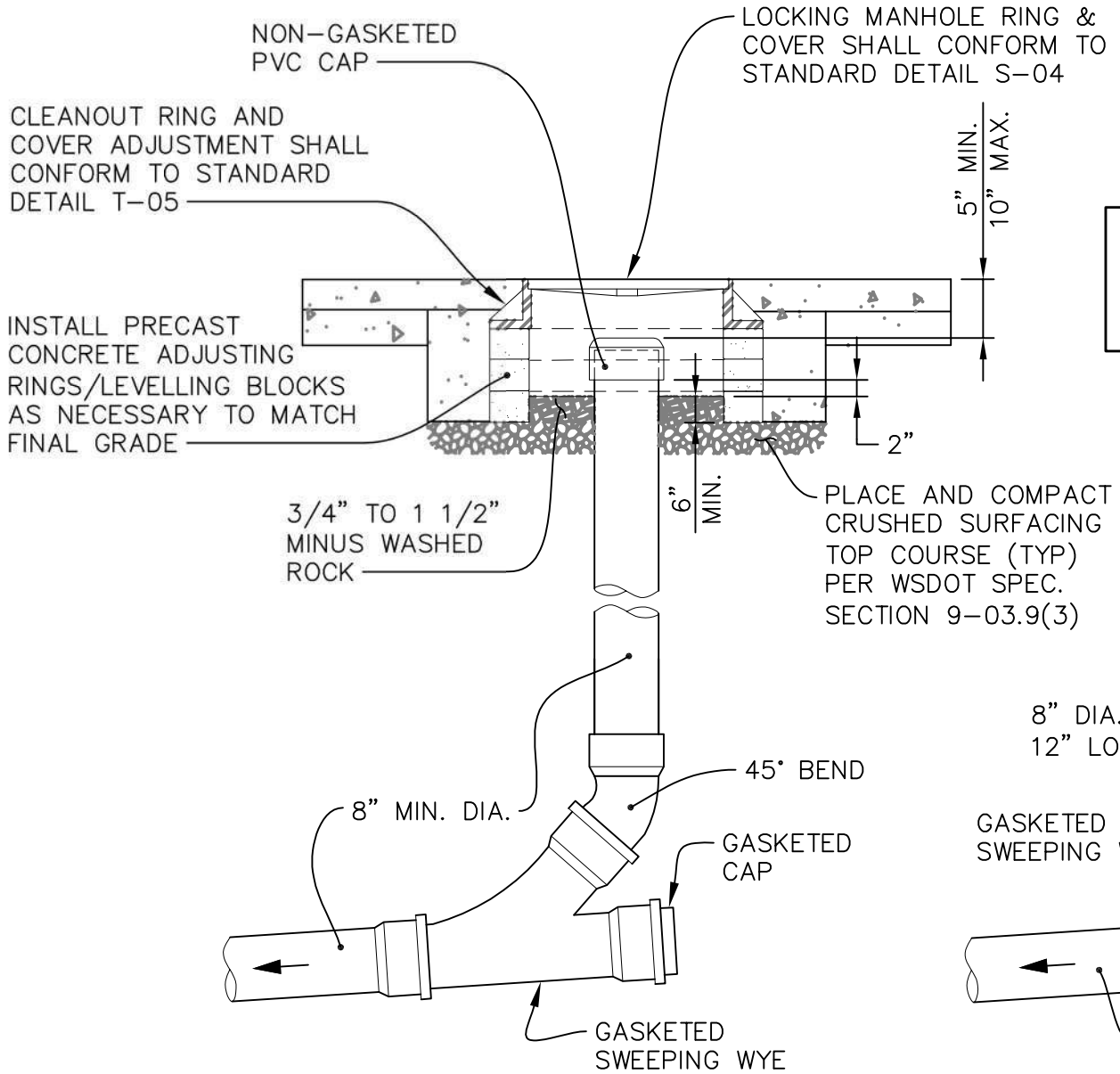


**STANDARD INSTALLATION**

NTS

**NOTE:**
MANHOLES ARE REQUIRED AT UPSTREAM END OF ALL SEWER MAINS.

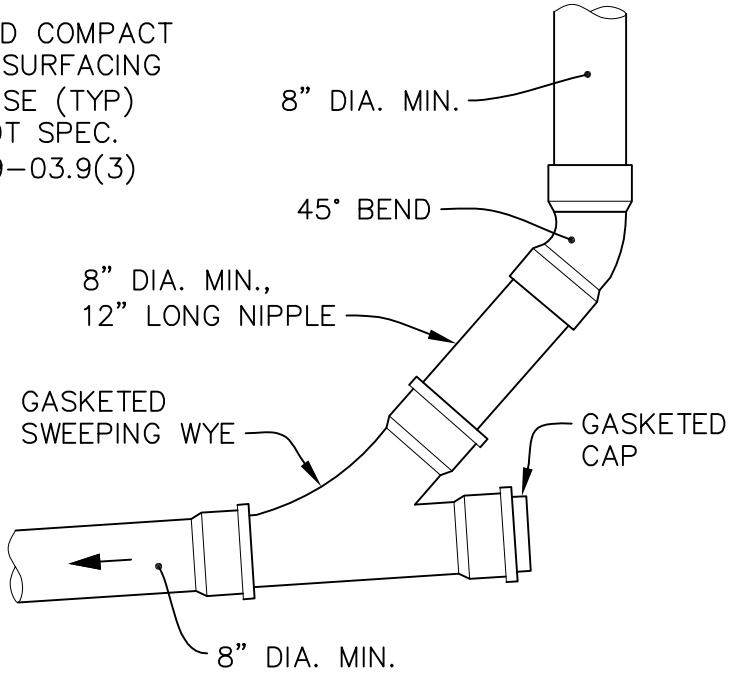


**ALTERNATE INSTALLATION**

NTS

APPROVED BY CITY ENGINEER:

DATE: 01/05/2021

CITY OF AUBURN WASHINGTON

PUBLIC SIDE SEWER CLEANOUT (8" OR LARGER)

PUBLIC WORKS DEPARTMENT

STANDARD DETAIL: S-03.2

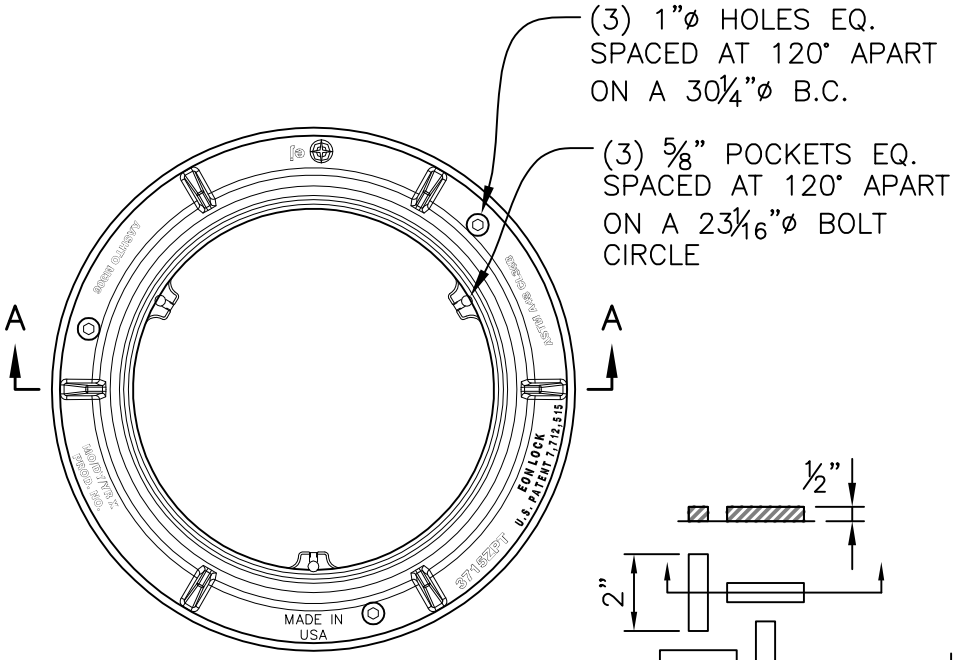


**FRAME - PLAN**
NTS

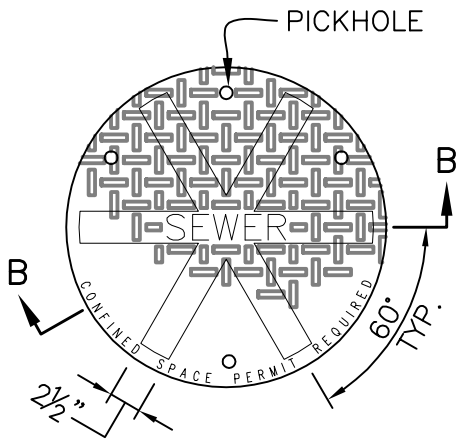


**COVER - PLAN**
NTS

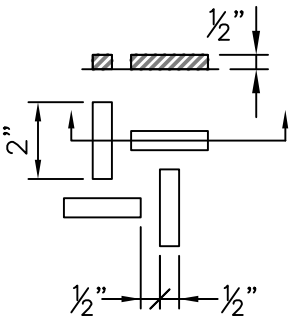


**NONSKID PATTERN**

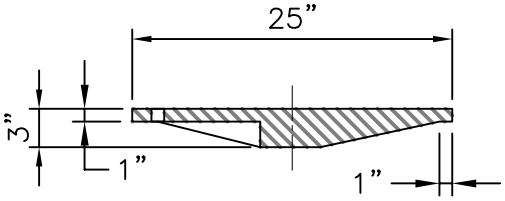


**SECTION B-B**
NTS

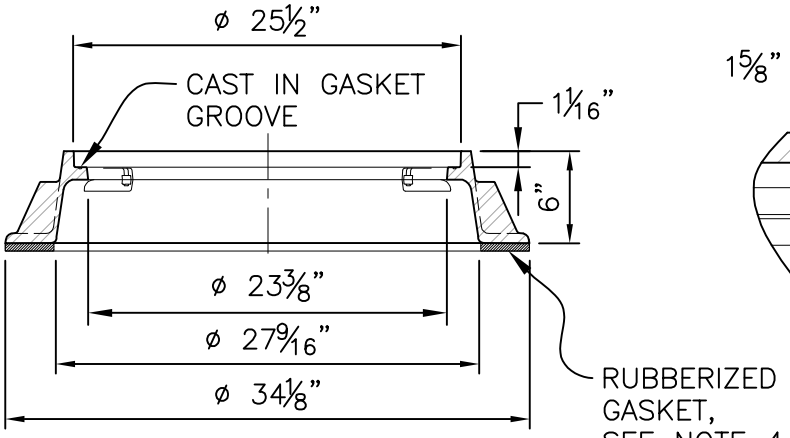


**SECTION A-A**
NTS

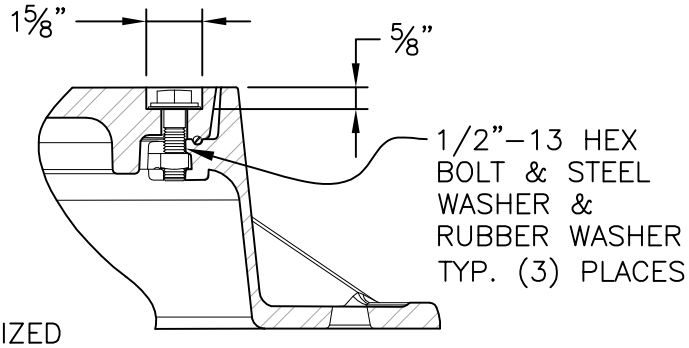


**BOLT DETAIL**
NTS

**NOTES:**

1. COVERS SHALL HAVE THEIR USE CAST IN 2" RAISED LETTERS: 'SEWER' FOR SANITARY SEWERS, 'DRAIN' FOR STORM SEWERS AND 'WATER' FOR WATER CONVEYANCE. THE WORDS 'CONFINED SPACE PERMIT REQUIRED' SHALL BE CAST IN 1" LETTERS AS SHOWN.
2. GRAY OR DUCTILE IRON FRAME AND DUCTILE IRON COVER WITH MINIMUM WEIGHTS AS FOLLOWS:

   FRAME = 210 LBS.

   COVER = 150 LBS.
3. PROVIDE SLIP RESISTANT COATING IN PAVED AREAS.
4. WHEN CALLED FOR IN THE CONTRACT DOCUMENTS, INSTALL INFRA–RISER PRODUCT NUMBER IC2431F0050F BY EJCO PER MANUFACTURER RECOMMENDATIONS (OR APPROVED EQUAL).

| APPROVED BY CITY ENGINEER: | DATE: | CITY OF AUBURN WASHINGTON | 24" DIA. MANHOLE FRAME AND COVER |
|---|---|---|---|
| PUBLIC WORKS DEPARTMENT | | | STANDARD DETAIL: S–04.4 |

Plotted by: Craig Dobyns on 12/16/2020 File location: M:\Construction Standard Details\Current Working DWG\Sewer and Storm\STDETL-S-04.4

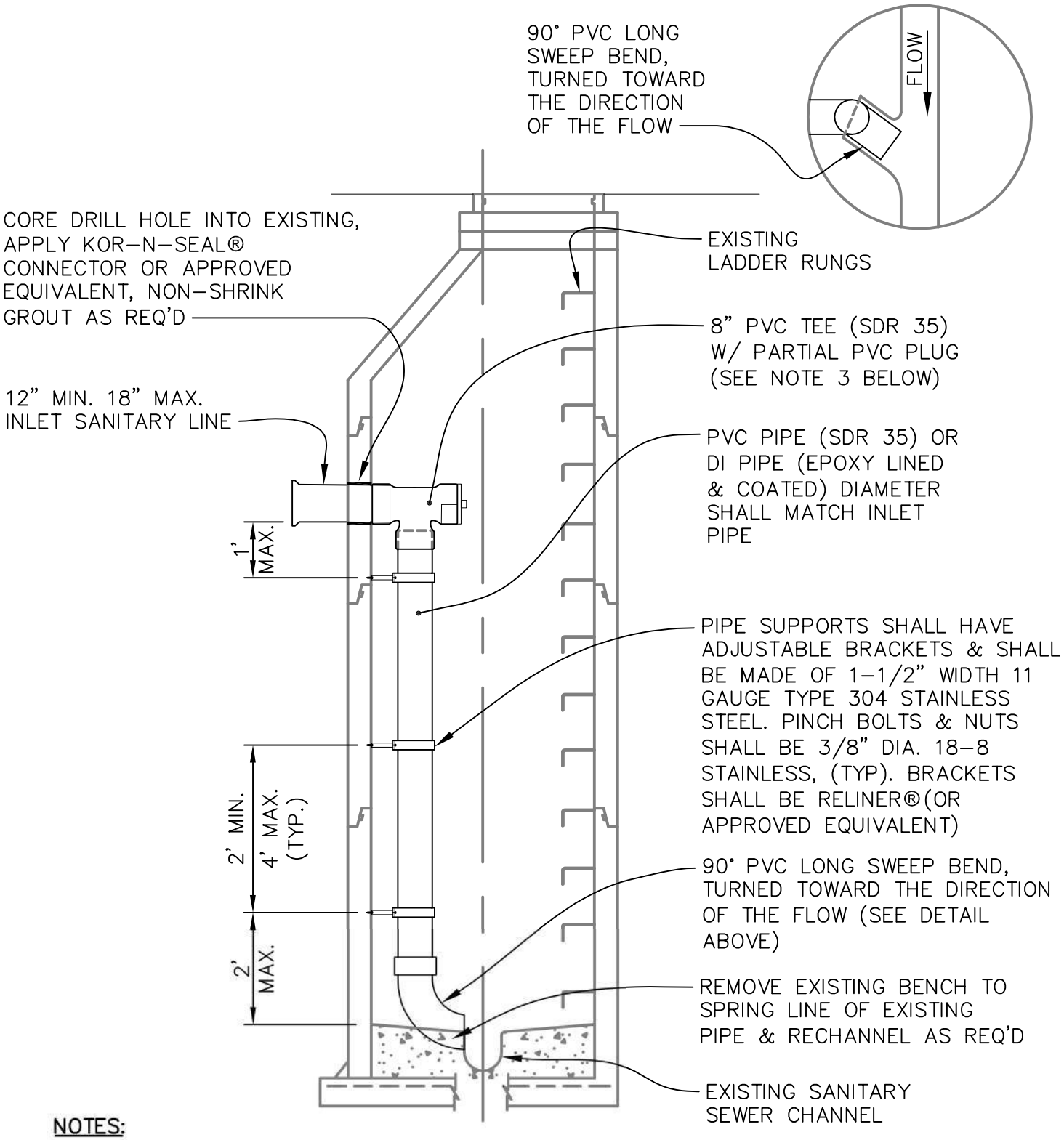


**NOTES:**

1. TYPE 1 MANHOLE SHOWN FOR ILLUSTRATIVE PURPOSES ONLY. DETAIL MAY ALSO BE APPLIED TO TYPE 2 & 3 MANHOLES.
2. DROP CONNECTIONS TO EXISTING 48" OR LARGER MANHOLES ONLY WITH ENGINEER APPROVAL.
3. PLUG TO BE CUT TO LEAVE 60% OF PIPE DIAMETER OPEN FOR MAINTENANCE ACCESS.

| APPROVED BY CITY ENGINEER: | DATE: | CITY OF AUBURN WASHINGTON | RETROFIT EXISTING MANHOLE WITH INSIDE DROP |
|---|---|---|---|
| PUBLIC WORKS DEPARTMENT | | | STANDARD DETAIL: S-05.2 |

Plotted by: Craig Dobyns on 12/10/2020 File location: M:\Construction Standard Details\Current Working DWG\Sewer and Storm\STDETL-S-05.2

**NOTE:**
CITY ENGINEER APPROVAL IS REQUIRED BEFORE USING THIS DETAIL

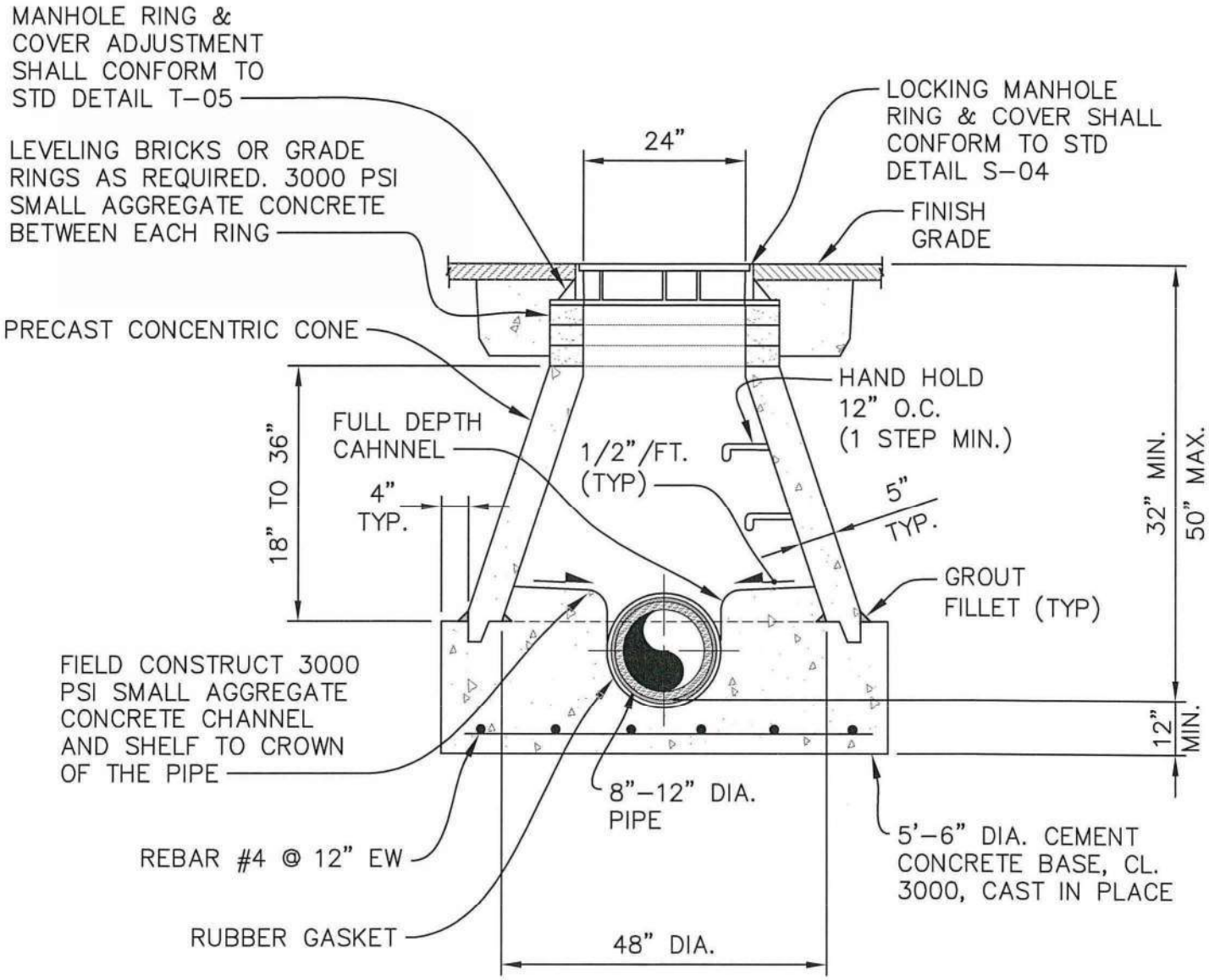


**ALTERNATE:**
MANUFACTURED BASE WITH FLAT TOP, FRAME AND COVER IS ACCEPTABLE

| APPROVED BY CITY ENGINEER: | DATE: | CITY OF AUBURN WASHINGTON | EXTRA SHALLOW MANHOLE DETAIL |
|---|---|---|---|
| | 8/5/2016 | | |
| COMMUNITY DEVELOPMENT & PUBLIC WORKS DEPT. | | | STANDARD DETAIL: S-06.1 |

Plotted by: Craig Dobyns on 7/13/2016 File location: N:\Construction Standard Details\Approved Drawing Files (dwg)\Sewer and Storm\STDETL-S-06.1

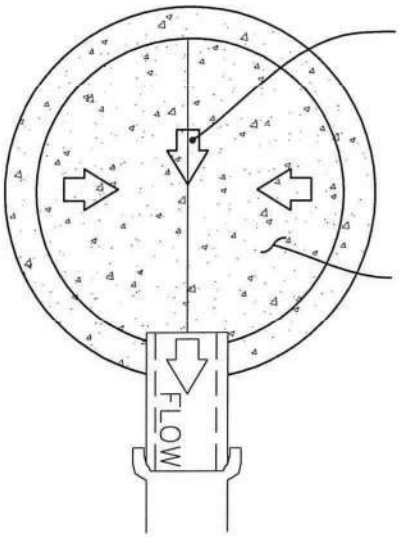


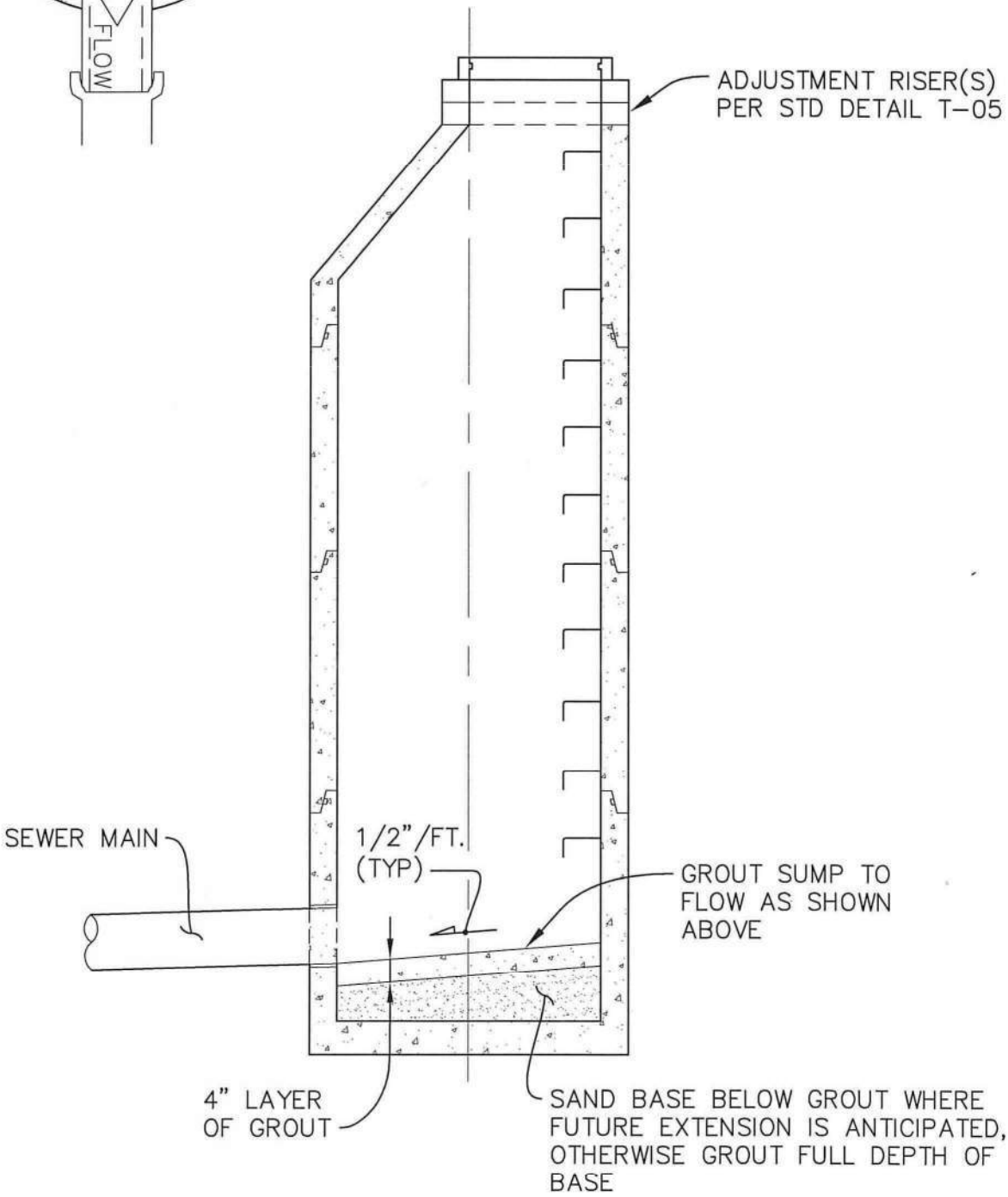


| APPROVED BY CITY ENGINEER: | DATE: | CITY OF AUBURN WASHINGTON | MANHOLE AT END OF SANITARY SEWER LINE |
|---|---|---|---|
| COMMUNITY DEVELOPMENT & PUBLIC WORKS DEPT. | | | STANDARD DETAIL: S-07.2 |

Plotted by: Vlad Rubashka on 1/17/2018 File location: M:\Construction Standard Details\Current Working DWG\Sewer and Storm\STDETL-S-07.2

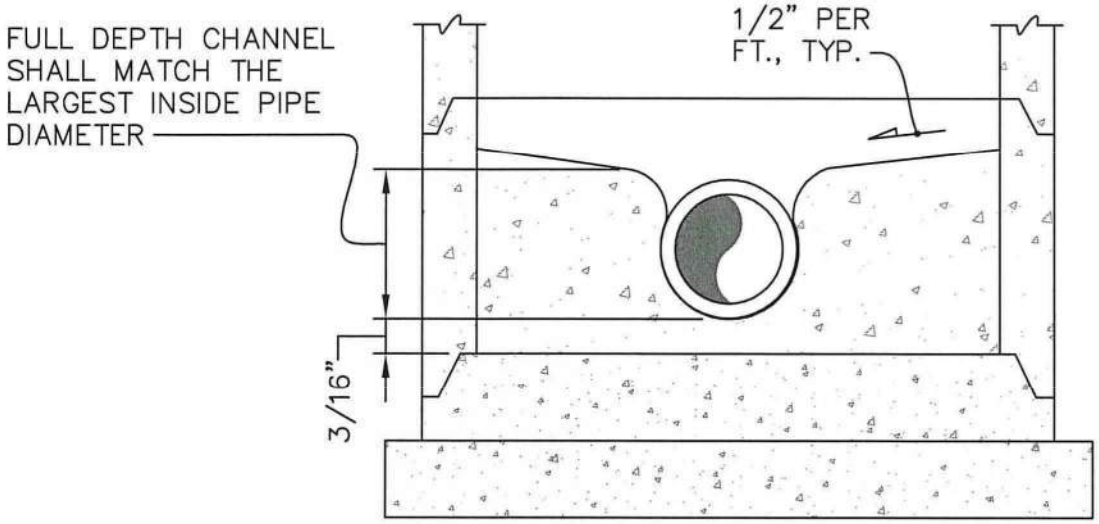


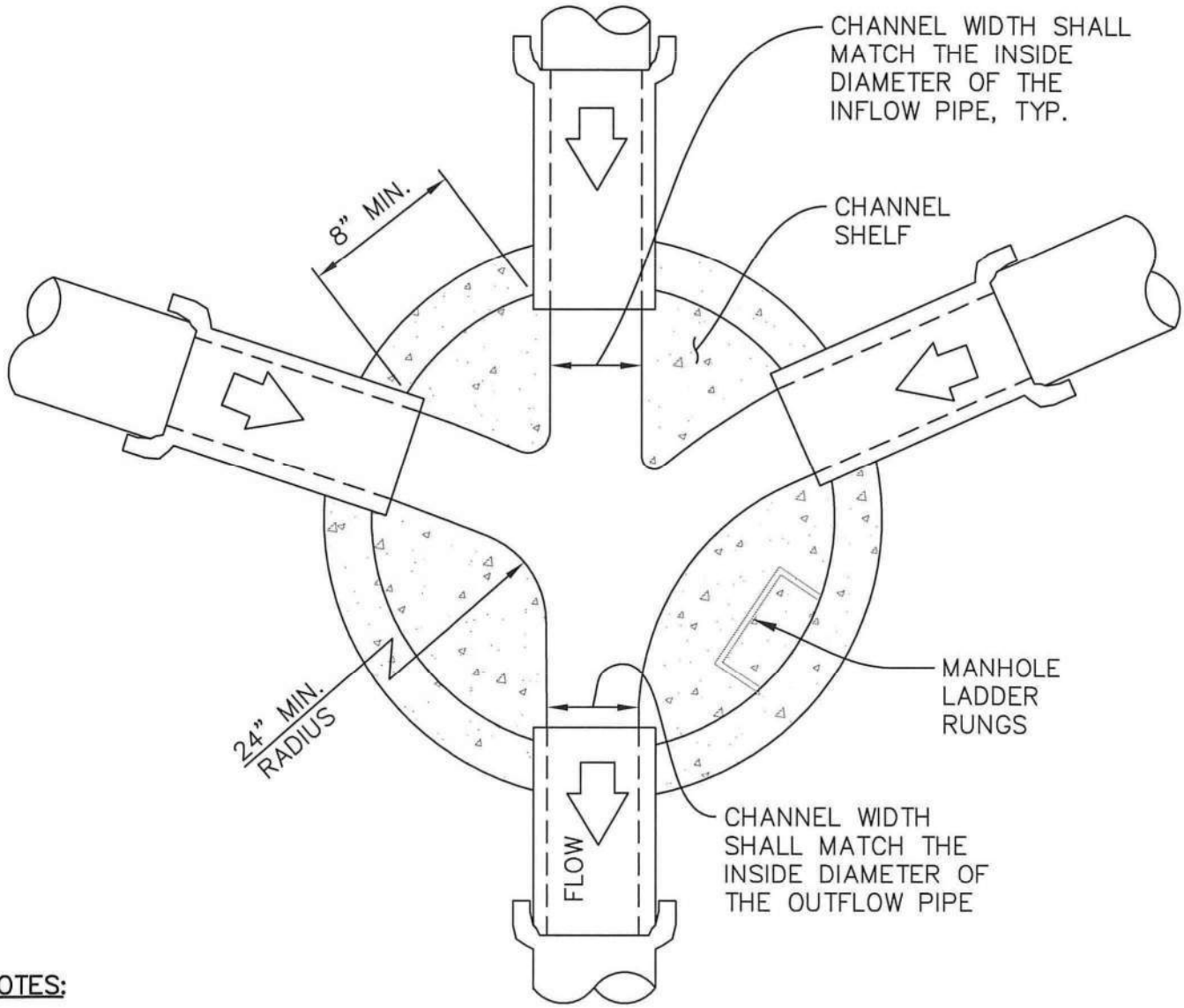


**NOTES:**

1. NO STEPS OVER PIPES OR MANHOLE CHANNELS. WHEN POSSIBLE, STEPS SHALL BE POSITIONED OVER THE LARGEST BENCH AREA.
2. FAST SETTING CONCRETE SHALL NOT BE USED.

| APPROVED BY CITY ENGINEER: | DATE: | CITY OF AUBURN WASHINGTON | MANHOLE CHANNEL CONSTRUCTION |
|---|---|---|---|
| | 8/5/2016 | | |
| COMMUNITY DEVELOPMENT & PUBLIC WORKS DEPT. | | | STANDARD DETAIL: S-08.1 |

Plotted by: Craig Dobyne on 7/13/2016 File location: W:\Construction Standard Details\Approved Drawing Files (dwg)\Sewer and Storm\STDETL-S-08.1

**NOTE:**
THIS DETAIL IS FOR STORM USE ONLY

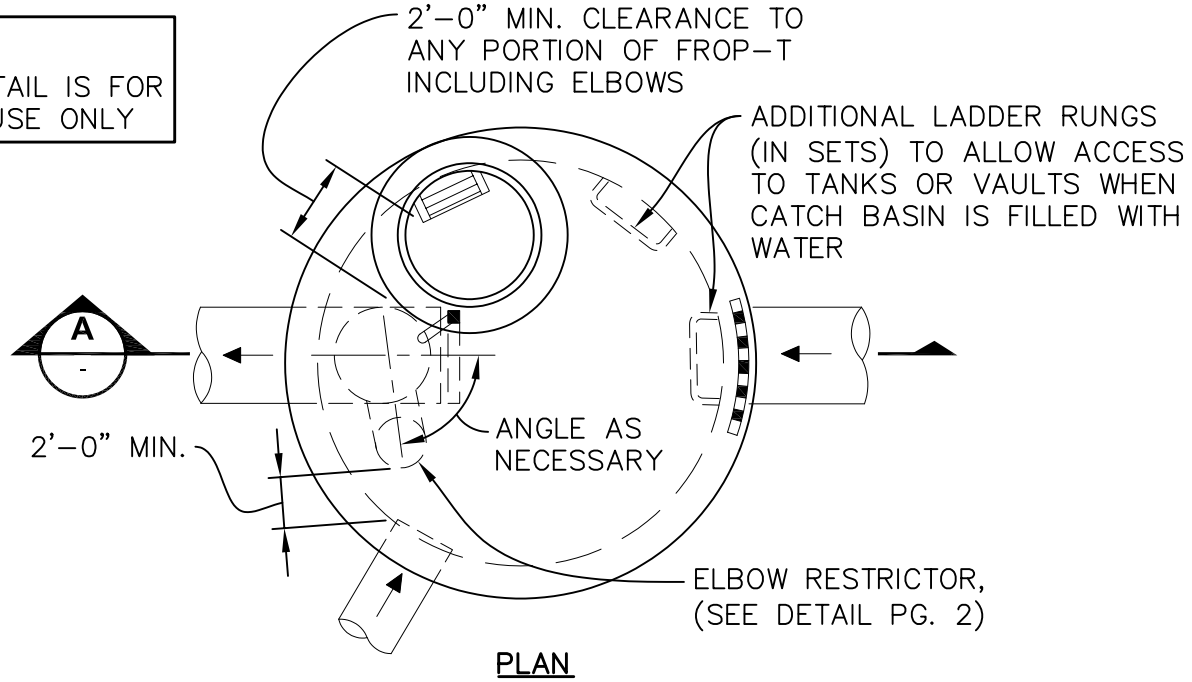


**PLAN**
NTS

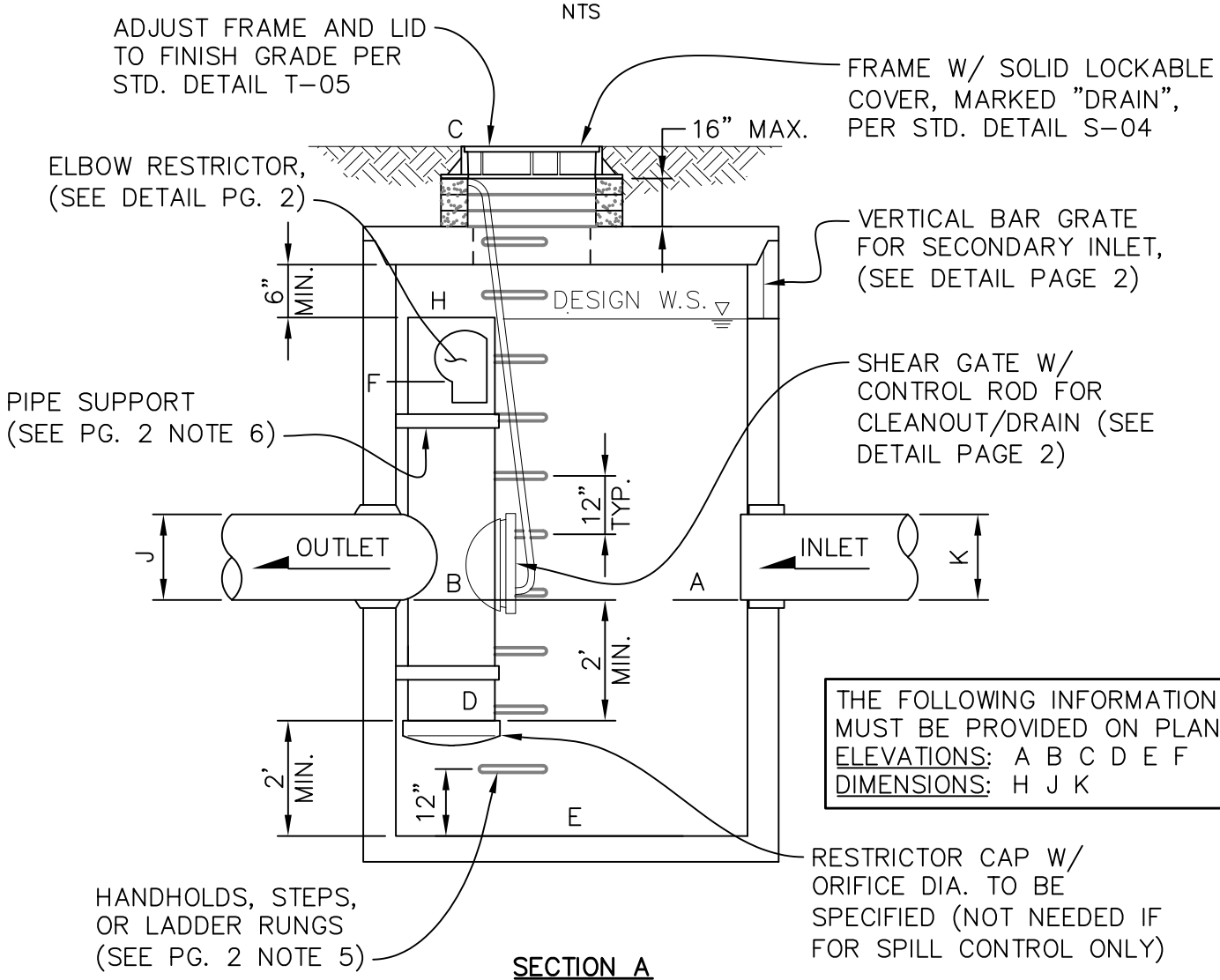


THE FOLLOWING INFORMATION MUST BE PROVIDED ON PLANS:
ELEVATIONS: A B C D E F
DIMENSIONS: H J K

**SECTION A**
NTS



| APPROVED BY CITY ENGINEER: | DATE: | CITY OF AUBURN WASHINGTON | FLOW RESTRICTOR |
|---|---|---|---|
| Jacob Freeling | 02/09/2023 | | |
| PUBLIC WORKS DEPARTMENT | | | STANDARD DETAIL: S-09.3 |

Plotted by: Craig Dobyns on 1/23/2023 File location: M:\Construction Standard Details\Current Working DWG\Sewer and Storm\STDETL-S-09.3

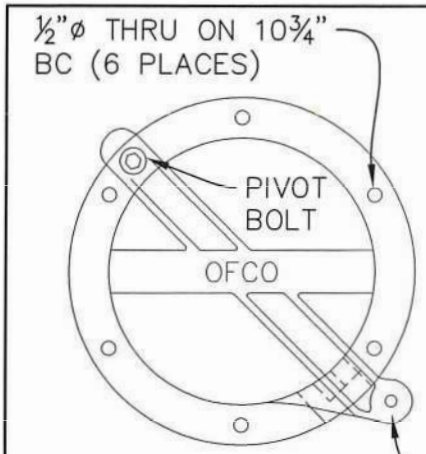


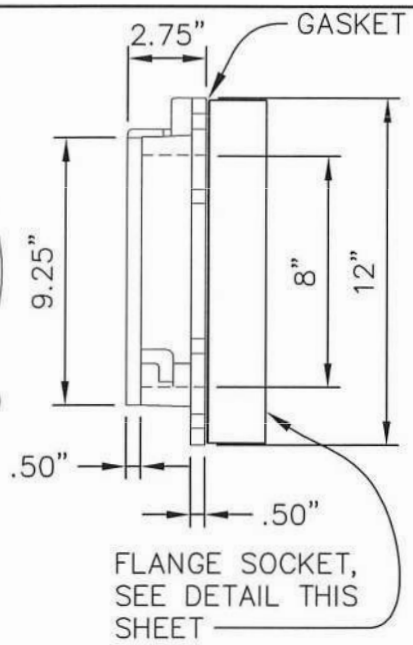


SHEAR GATE
NTS

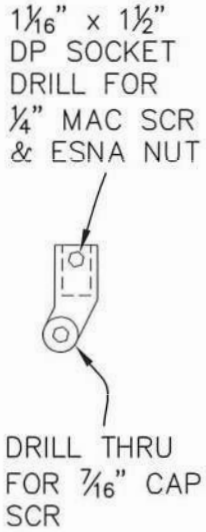


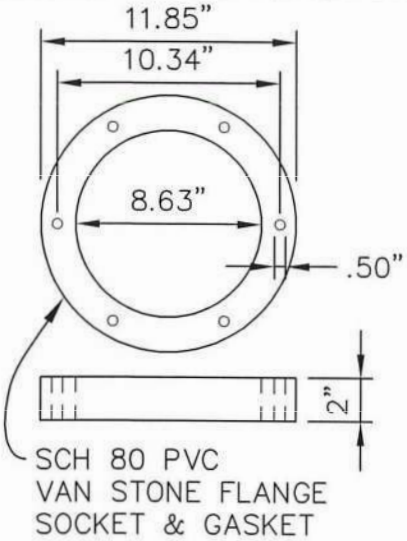


FLANGE SOCKET
NTS

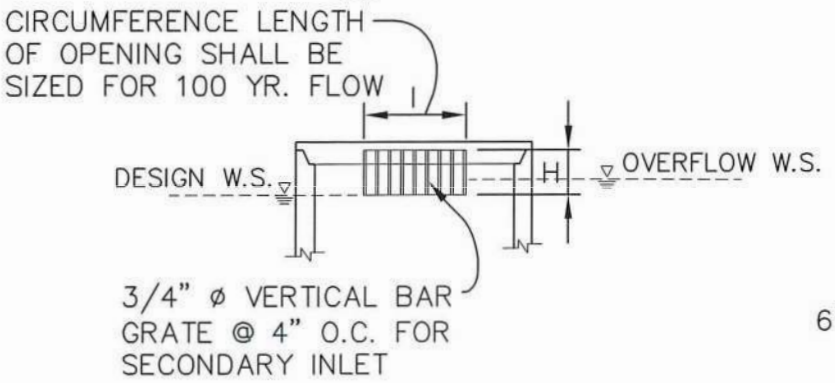


VERTICAL BAR GRATE
NTS

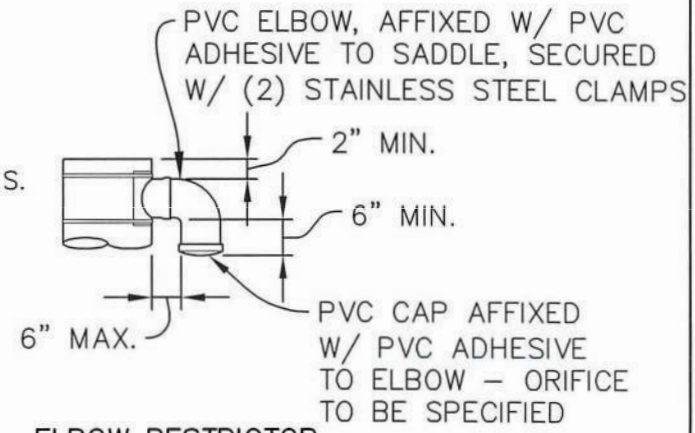


ELBOW RESTRICTOR
NTS

**NOTE:**
THIS DETAIL IS FOR STORM USE ONLY

**NOTES:**

1. USE A MINIMUM OF 54" DIA. TYPE 2 CATCH BASIN.
2. OUTLET CAPACITY SHALL BE 100–YR. DEVELOPED PEAK FLOW.
3. RESTRICTOR TO BE MADE WITH NON–GASKETED PVC, SDR–35.
4. FLOW RESTRICTOR TO BE CONNECTED TO OUTLET PIPE WITH GASKETED CONNECTION OR ROMAC COUPLER.
5. BASIN LID FRAME AND LADDER RUNGS OR STEPS ARE OFFSET SO THAT:
   A. RESTRICTOR IS VISIBLE FROM TOP.
   B. ACCESS SPACE IS CLEAR OF RISER AND RESTRICTOR.
   C. COVER FRAME IS CLEAR OF CURB.
6. PROVIDE AT LEAST TWO 3"x0.090 GAUGE TYPE 304 STAINLESS STEEL SUPPORT BRACKET EPOXY ANCHORED 2" INTO CONCRETE WALL WITH MAX. 3' VERTICAL SPACING.
7. LOCATE ELBOW RESTRICTOR AS NECESSARY TO PROVIDE MINIMUM CLEARANCE AS SHOWN. PIPE SIZES AND SLOPE PER PLAN. SHOW ALLOWABLE DISCHARGE "Q"



| APPROVED BY CITY ENGINEER: Jacob Fuentes | DATE: 12/20/19 | CITY OF AUBURN WASHINGTON | FLOW RESTRICTOR |
|---|---|---|---|
| PUBLIC WORKS DEPARTMENT | | | STANDARD DETAIL: S–09a.2 |

**CURB OPENING INLET NOTES:**

1. STRUCTURE SHALL BE MONOLITHIC AIR-ENTRAINED CLASS 3000 CONCRETE.
2. HOT DIP GALVANIZE C6x8.2 CHANNEL & ANCHOR BOLTS AFTER FABRICATION.

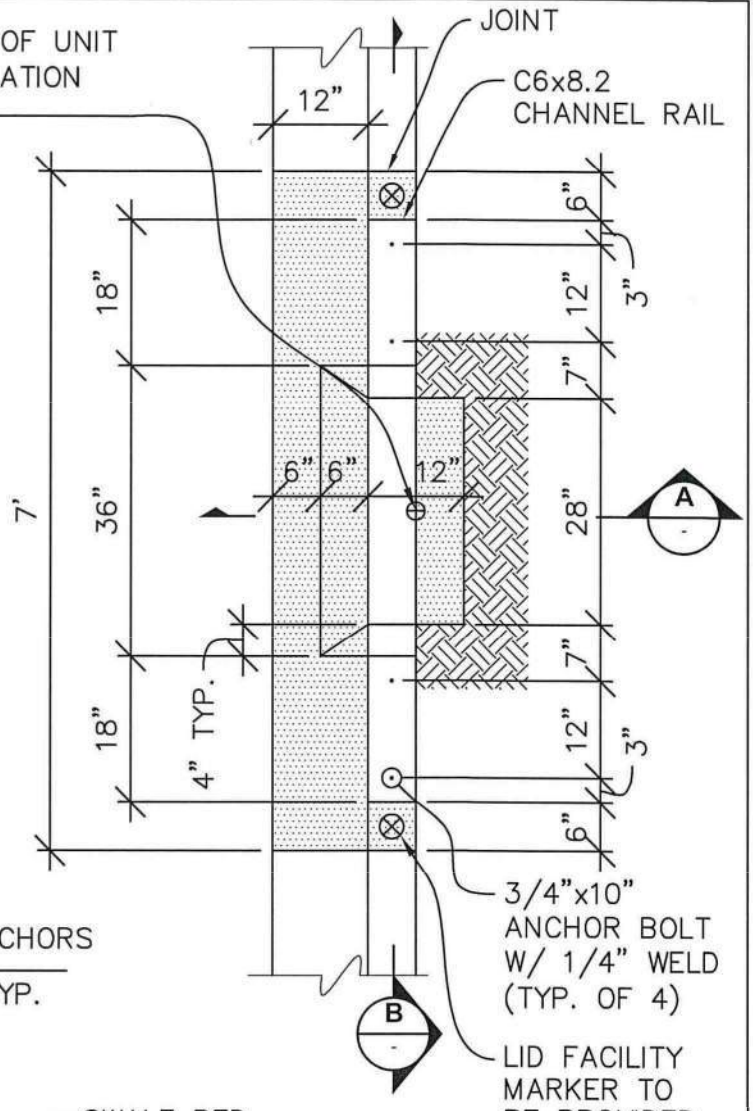


PLAN
NTS

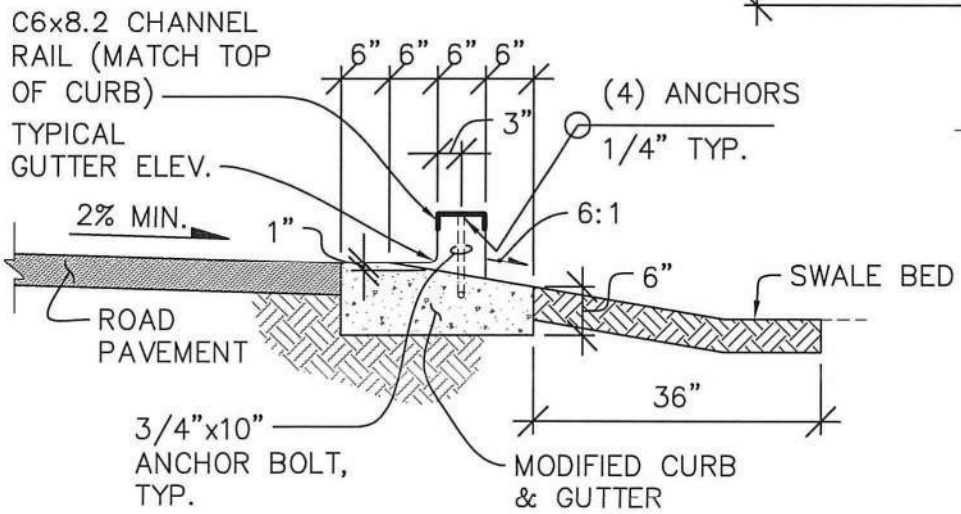


SECTION A
NTS

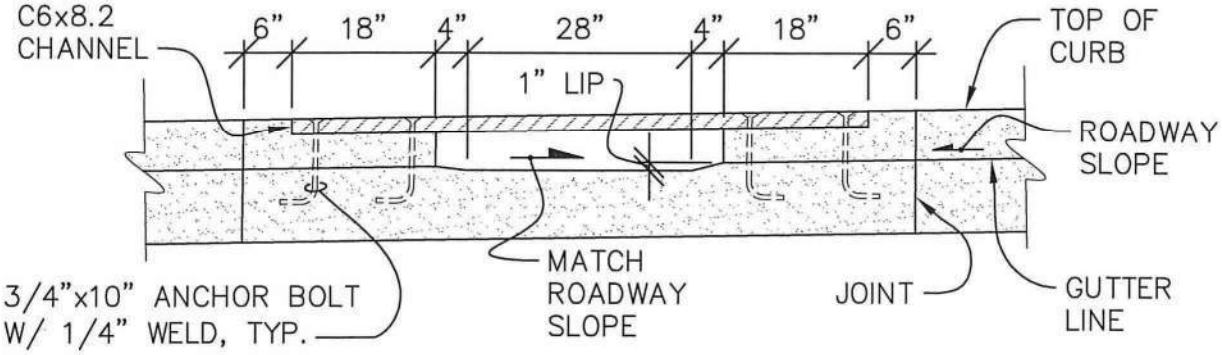


SECTION B
NTS

| APPROVED BY CITY ENGINEER: | DATE: 2/20/2018 | CITY OF AUBURN WASHINGTON | COVERED CURB OPENING INLET |
|---|---|---|---|
| COMMUNITY DEVELOPMENT & PUBLIC WORKS DEPT. | | | STANDARD DETAIL: S-10.1 |

Plotted by: Vlad Rubashka on 1/10/2018 File location: M:\Construction Standard Details\Current Working DWG\Sewer and Storm\STDETL-S-10.1

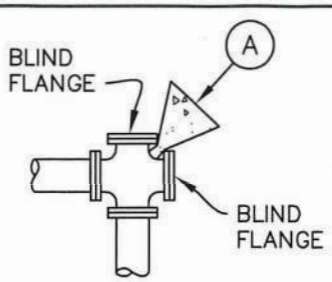


CAPPED CROSS

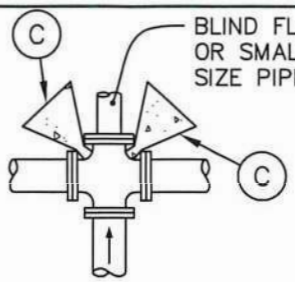


UNBALANCED CROSS

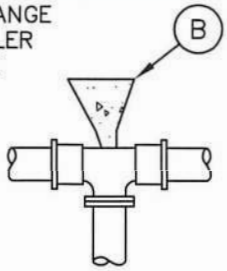


TEE

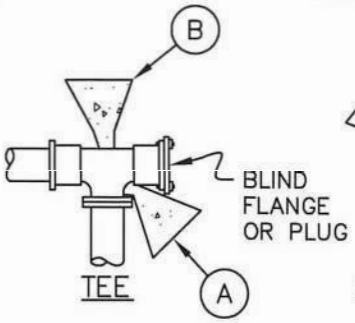


TEE

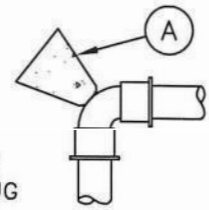


90° BEND

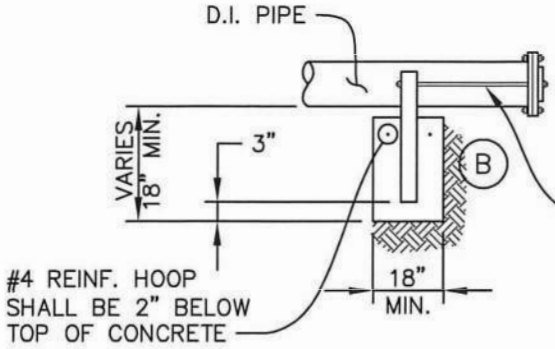


TIE BACK BLOCK DETAIL

**NOTE:**
SEE STD. DETAIL W-03 FOR TYPICAL BLOW OFF ASSEMBLY. MAINTAIN 2" CLEARANCE BETWEEN CONCRETE AND PIPE

FOR PIPE SIZES UNDER 12" USE 2 3/4" ø HOT DIPPED GALV. THREADED RODS FOR 12" & 14" USE 4 3/4" ø HOT DIPPED GALV. RODS

HORIZ OR UPWARD VERT. BENDS

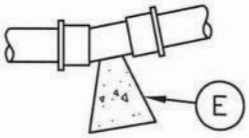


11 1/4° BEND

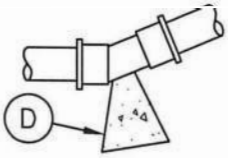


22 1/2° BEND

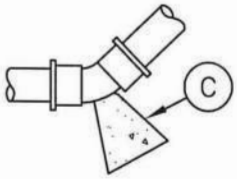


45° BEND

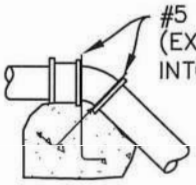


DOWNWARD VERTICAL BEND

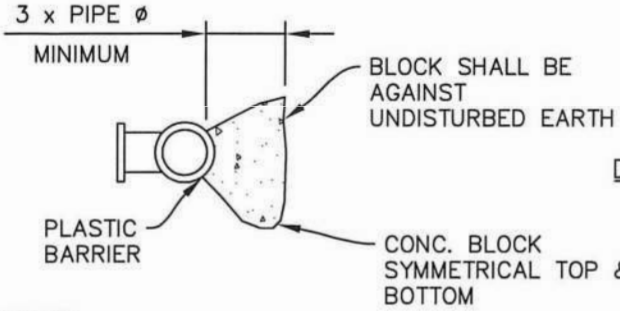


**NOTES:**

1. BEARING AREA OF CONC. THRUST BLOCK IS BASED ON 200 PSI PRESSURE AND SAFE SOIL BEARING LOAD OF 2000 PSF.
2. AREAS MUST BE ADJUSTED FOR OTHER PIPE SIZES, PRESSURES, AND SOIL CONDITIONS.
3. CONCRETE BLOCKING SHALL BE CAST IN PLACE AND HAVE A MINIMUM OF 1/4 SQUARE FOOT BEARING AGAINST THE FITTING.
4. THE BLOCK SHALL BEAR AGAINST THE FITTINGS ONLY AND SHALL BE CLEAR OF JOINTS TO PERMIT TAKING UP AND DISMANTLING OF JOINT.
5. THE CONTRACTOR SHALL INSTALL BLOCKING ADEQUATE TO WITHSTAND FULL TEST PRESSURE AS WELL AS TO CONTINUOUSLY WITHSTAND OPERATING PRESSURE UNDER ALL CONDITIONS OF SERVICE.
6. USE 2" THICK STYROFOAM TO FORM THE CONCRETE BLOCKING. PLASTIC SHALL BE INSTALLED BETWEEN ALL CONCRETE BLOCKING AND FITTINGS.
7. RESTRAINED JOINTS ARE REQUIRED WHERE BEARING SOILS OR FILL MATERIAL ARE DETERMINED BY THE ENGINEER TO BE UNSUITABLE TO PROVIDE ADEQUATE BEARING LOAD, OR THIS SOIL HAS BEEN DISTURBED.

THRUST BLOCK TABLE
MIN. BEARING AGAINST UNDISTURBED SOIL

| PIPE SIZE | (A) SQ. FT. | (B) SQ. FT. | (C) SQ. FT. | (D) SQ. FT. | (E) SQ. FT. |
|---|---|---|---|---|---|
| 4" | 3 | 3 | 2 | 2 | 2 |
| 6" | 4 | 3 | 2 | 2 | 2 |
| 8" | 7 | 5 | 4 | 2 | 2 |
| 10" | 11 | 8 | 6 | 3 | 2 |
| 12" | 16 | 11 | 9 | 5 | 3 |
| 14" | 22 | 15 | 12 | 6 | 3 |
| 16" | 29 | 20 | 16 | 8 | 4 |
| 18" | 36 | 25 | 20 | 10 | 5 |
| 20" | 45 | 32 | 24 | 13 | 6 |
| 22" | 54 | 38 | 29 | 15 | 8 |
| 24" | 64 | 45 | 35 | 18 | 9 |
| 28" | 87 | 62 | 48 | 24 | 12 |
| 30" | 101 | 71 | 55 | 28 | 14 |
| 36" | 145 | 102 | 78 | 40 | 20 |
| 42" | 197 | 139 | 107 | 55 | 27 |
| 48" | 257 | 181 | 140 | 71 | 36 |

APPROVED BY CITY ENGINEER: DATE: 9/8/2016

CITY OF AUBURN WASHINGTON

WATER MAIN BLOCKING

COMMUNITY DEVELOPMENT & PUBLIC WORKS DEPT. STANDARD DETAIL: W-01.1

Plotted by: Craig Dobyns on 8/10/2016 File location: M:\Construction Standard Details\Approved Drawing Files (dwg)\Water\STDETL-W-01.1

**NOTE:** FOR LOCATIONS WITHOUT CURB, AIR VAC. SHALL BE PLACED ON PROPERTY SIDE OF DITCH. IF NO ROOM IS AVAILABLE, INSTALL CULVERT IN DITCH WITH AIR VAC. INFILL OVER CULVERT.

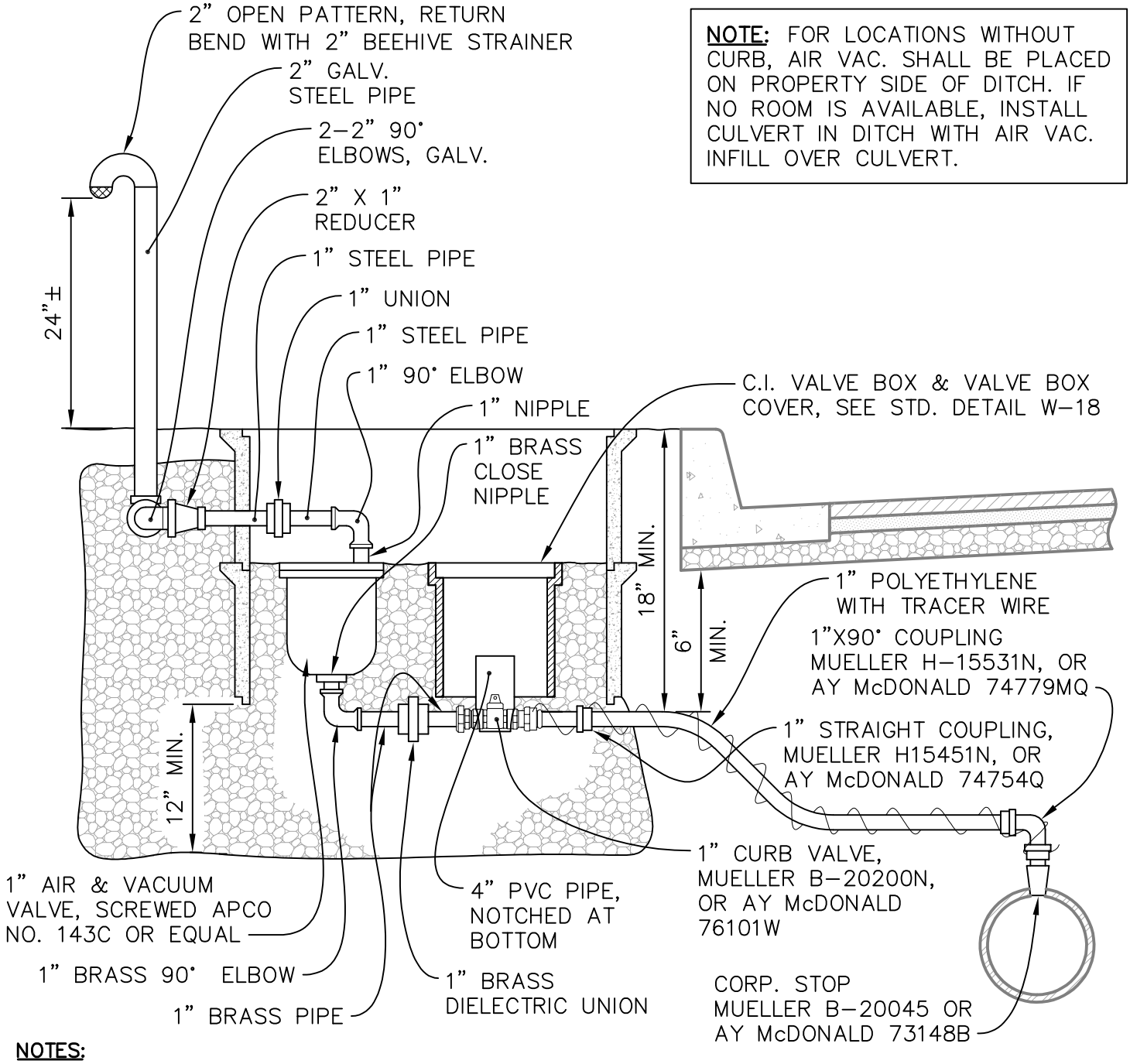


**NOTES:**

1. AIR VALVE TO BE INSTALLED IN 17" X 30" HUBBELL QUAZITE OR ARMORCAST METER BOX W/ SOLID DUCTILE COVER, EAST JORDAN IRON WORKS (OR APPROVED EQUIVALENT).
2. BED WITH 3/4" WASHED ROCK, PASSING 1 1/2" AND RETAINED ON 1/4" MESH FOR DRAIN.
3. POLYETHYLENE PIPE SHALL BE AS SPECIFIED IN SECTION 9–30.6(3) OF THE CONSTRUCTION STANDARDS AND THE CONTRACT PROVISIONS.
4. DIELECTRIC UNIONS ARE REQUIRED FOR JOINING DISSIMILAR MATERIAL TYPES.
5. MAINTAIN POSITIVE GRADE FROM MAIN TO VALVE.
6. IN LIEU OF 2" BEEHIVE STRAINER, CONTACT CITY WATER DEPT. FOR LIST OF DOH APPROVED STRAINERS.
7. WHEN INSTALLED IN CONJUNCTION WITH A FIRE HYDRANT ON A DEAD END MAIN, THE AIR VAC SHALL BE INSTALLED AFTER THE FIRE HYDRANT.

| APPROVED BY CITY ENGINEER: Jacob Sweeting | DATE: 2/7/24 | CITY OF AUBURN WASHINGTON | TYPICAL AIR AND VACUUM RELIEF VALVE DETAIL |
|---|---|---|---|
| PUBLIC WORKS DEPARTMENT | | | STANDARD DETAIL: W–02.6 |

Plotted by: Craig Dobyns on 1/24/2024 File location: M:\Construction Standard Details\Current Working DWG\Water\STDETL–W–02.6

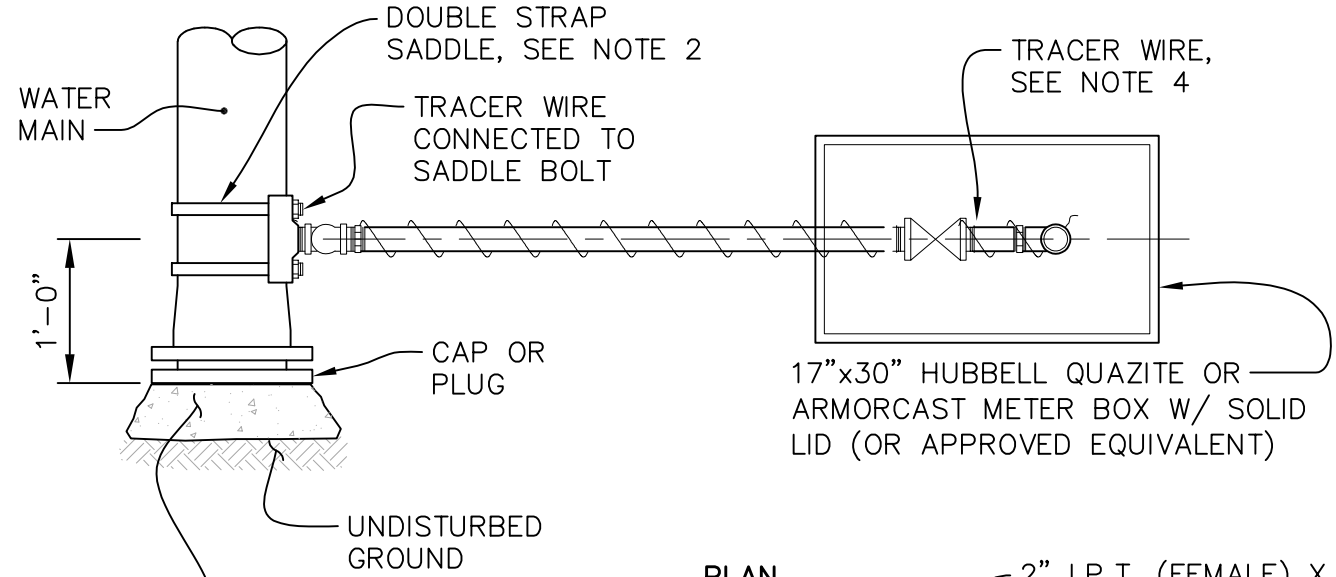


**PLAN**

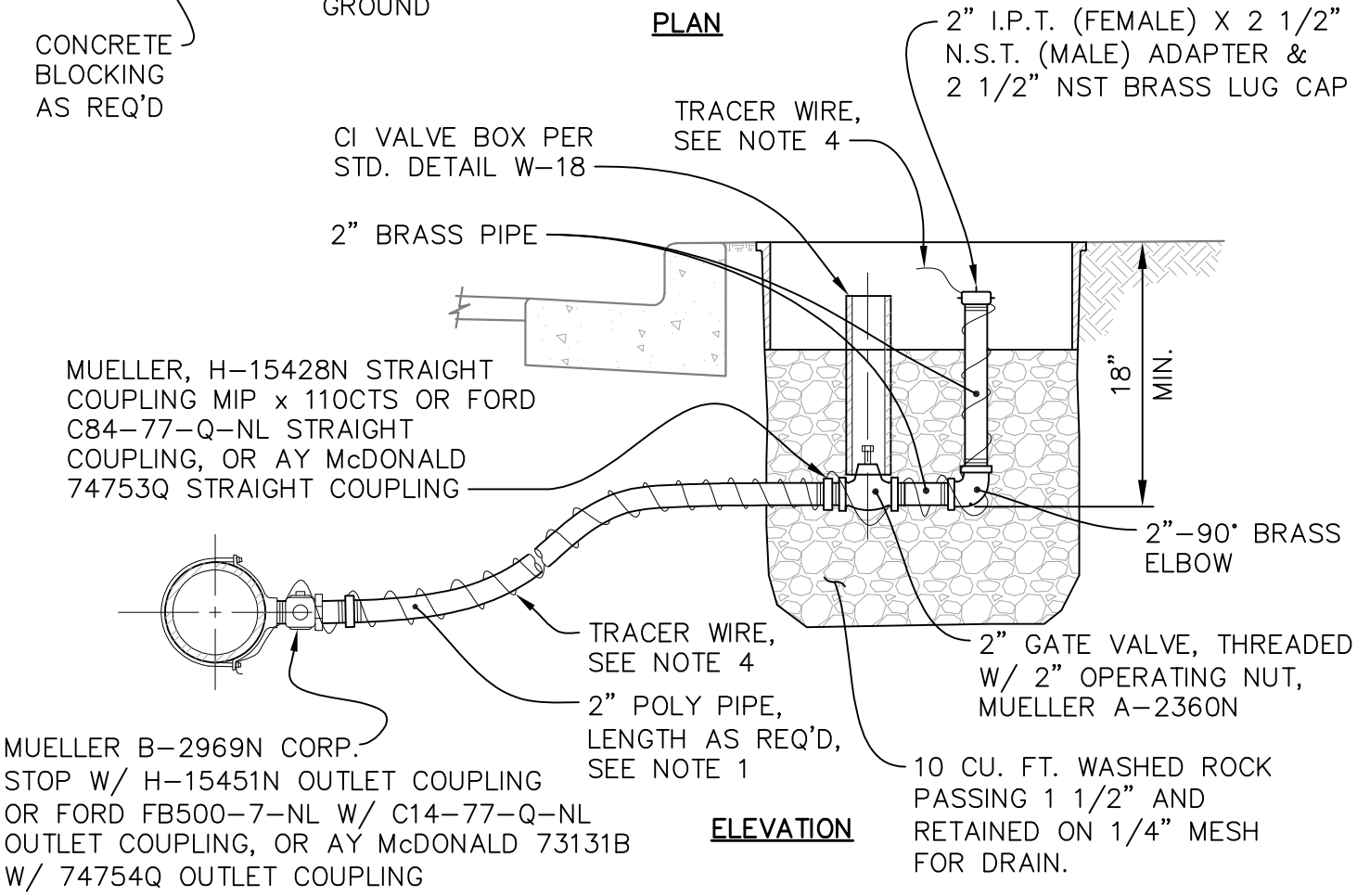


**ELEVATION**

**NOTES:**

1. 2" POLY PIPE SHALL BE AS SPECIFIED IN SECTION 9-30.6(3) OF THE CONSTRUCTION STANDARDS AND THE CONTRACT PROVISIONS.
2. SADDLE SHALL BE AS SPECIFIED IN SECTION 9-30.6(1) OF THE CONSTRUCTION STANDARDS AND THE CONTRACT PROVISIONS.
3. FOR LOCATIONS WITHOUT CURB, BLOWOFF SHALL BE PLACED ON PROPERTY SIDE OF THE DITCH. IF NO ROOM IS AVAILABLE, INSTALL CULVERT IN DITCH W/ BLOWOFF IN FILL OVER CULVERT.
4. TRACER WIRE SHALL BE INSULATED #10 COPPER WIRE, BARED AT ENDS.

| APPROVED BY CITY ENGINEER: Jacob Sweeting | DATE: 2/7/24 | CITY OF AUBURN WASHINGTON | 2" PERMANENT BLOW OFF ASSEMBLY |
|---|---|---|---|
| PUBLIC WORKS DEPARTMENT | | | STANDARD DETAIL: W-03.5 |

Plotted by: Craig Dobyns on 1/24/2024 File location: M:\Construction Standard Details\Current Working DWG\Water\STDETL-W-03.5

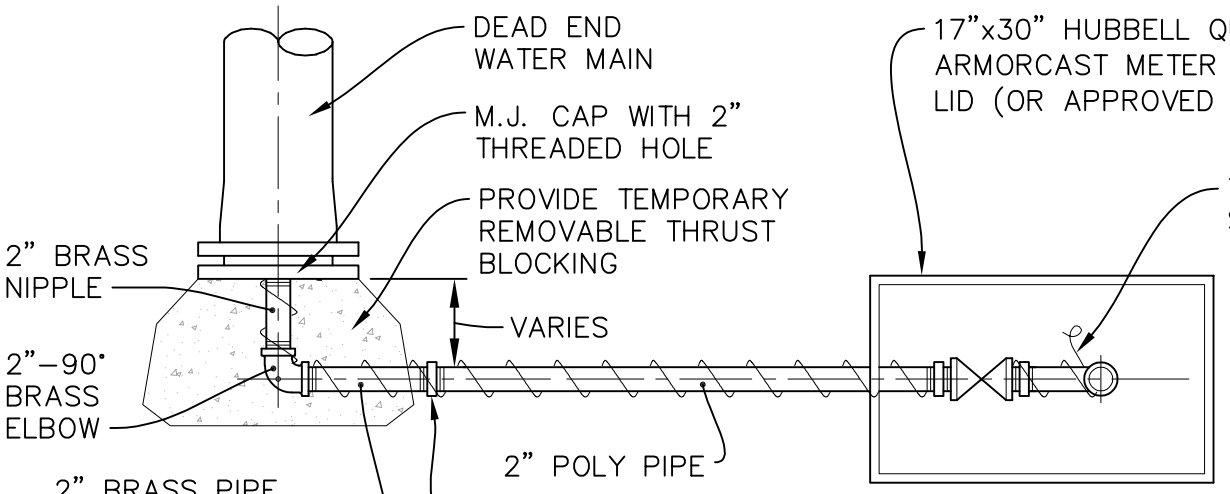


PLAN

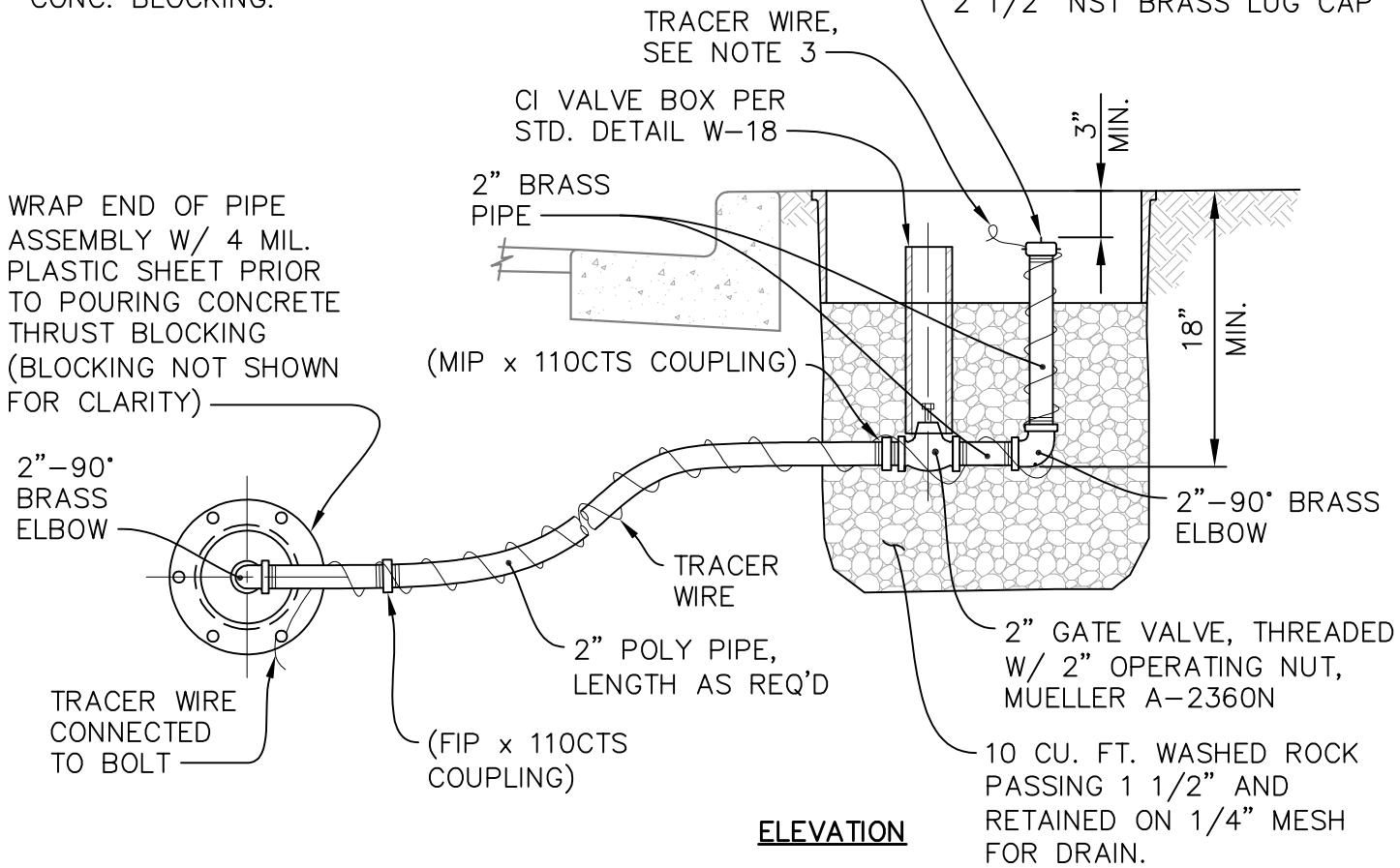


ELEVATION

**NOTES:**

1. 2" POLY PIPE SHALL BE AS SPECIFIED IN SECTION 9-30.6(3) OF THE CONSTRUCTION STANDARDS AND THE CONTRACT PROVISIONS.
2. TEMPORARY BLOWOFFS SHALL BE USED ON ALL DEAD END WATERLINES WITH LOCATION OF BLOWOFF BOX AS SHOWN ON THE PLAN OR WHERE DIRECTED BY THE ENGINEER.
3. TRACER WIRE SHALL BE INSULATED #10 COPPER WIRE, BARED AT ENDS.
4. GATE VALVE SHALL BE AS SPECIFIED IN SECTION 9-30.3(1) OF THE CONSTRUCTION STANDARDS AND THE CONTRACT PROVISIONS.

| APPROVED BY CITY ENGINEER: Jacob Sweeting | DATE: 1/17/2022 | CITY OF AUBURN WASHINGTON | TEMPORARY BLOW OFF DETAIL |
|---|---|---|---|
| PUBLIC WORKS DEPARTMENT | | | STANDARD DETAIL: W-04.4 |

Plotted by: Craig Dobyns on 1/6/2022 File location: M:\Construction Standard Details\Current Working DWG\Water\STDETL-W-04.4

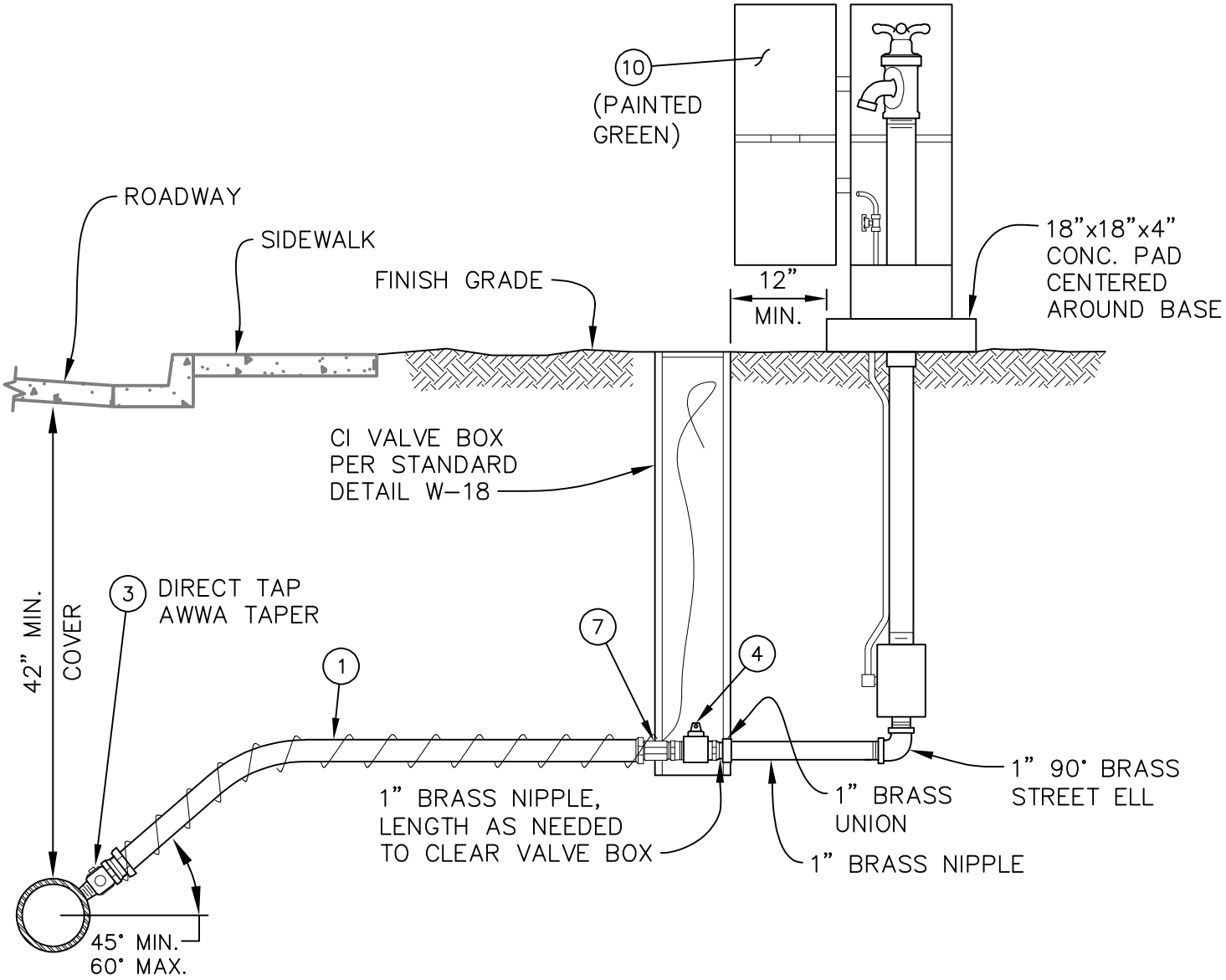


| MATERIAL LIST | | | | |
|---|---|---|---|---|
| ITEM NO. | DESCRIPTION | FORD PART # | MUELLER PART # | AY McDONALD PART # |
| 1 | 1" TYPE K COPPER OR CTS POLY PIPE | PER TABLE ON STD DTL W-15 | PER TABLE ON STD DTL W-15 | PER TABLE ON STD DTL W-15 |
| 3 | 1" CORP STOP | PER TABLE ON STD DTL W-15 | PER TABLE ON STD DTL W-15 | PER TABLE ON STD DTL W-15 |
| 4 | CURB VALVE | PER TABLE ON STD DTL W-15 | PER TABLE ON STD DTL W-15 | PER TABLE ON STD DTL W-15 |
| 7 | 1" COUPLING | PER TABLE ON STD DTL W-15 | PER TABLE ON STD DTL W-15 | PER TABLE ON STD DTL W-15 |

**NOTES:**

1. ALL PIPE AND FITTINGS TO BE ASSEMBLED W/ TEFLON AND PIPE DOPE UNLESS OTHERWISE NOTED.
2. SERVICE LINES SHALL BE INSTALLED PERPENDICULAR TO THE WATER MAIN.
3. THE SERVICE LINE SHALL BE INSTALLED TO ALLOW FOR THE FAR SIDE OF THE SAMPLE STATION TO BE INSTALLED IN THE ROW OR EASEMENT LINE, UNLESS OTHERWISE DIRECTED BY THE CITY.

| APPROVED BY CITY ENGINEER: | DATE: | CITY OF AUBURN WASHINGTON | WATER SAMPLING STATIONING DETAIL |
|---|---|---|---|
| Jacob Sweeting | 2/7/24 | | |
| PUBLIC WORKS DEPARTMENT | | | STANDARD DETAIL: W-05.4 |

Plotted by: Craig Dobyns on 1/24/2024 File location: M:\Construction Standard Details\Current Working DWG\Water\STDETL-W-05.4

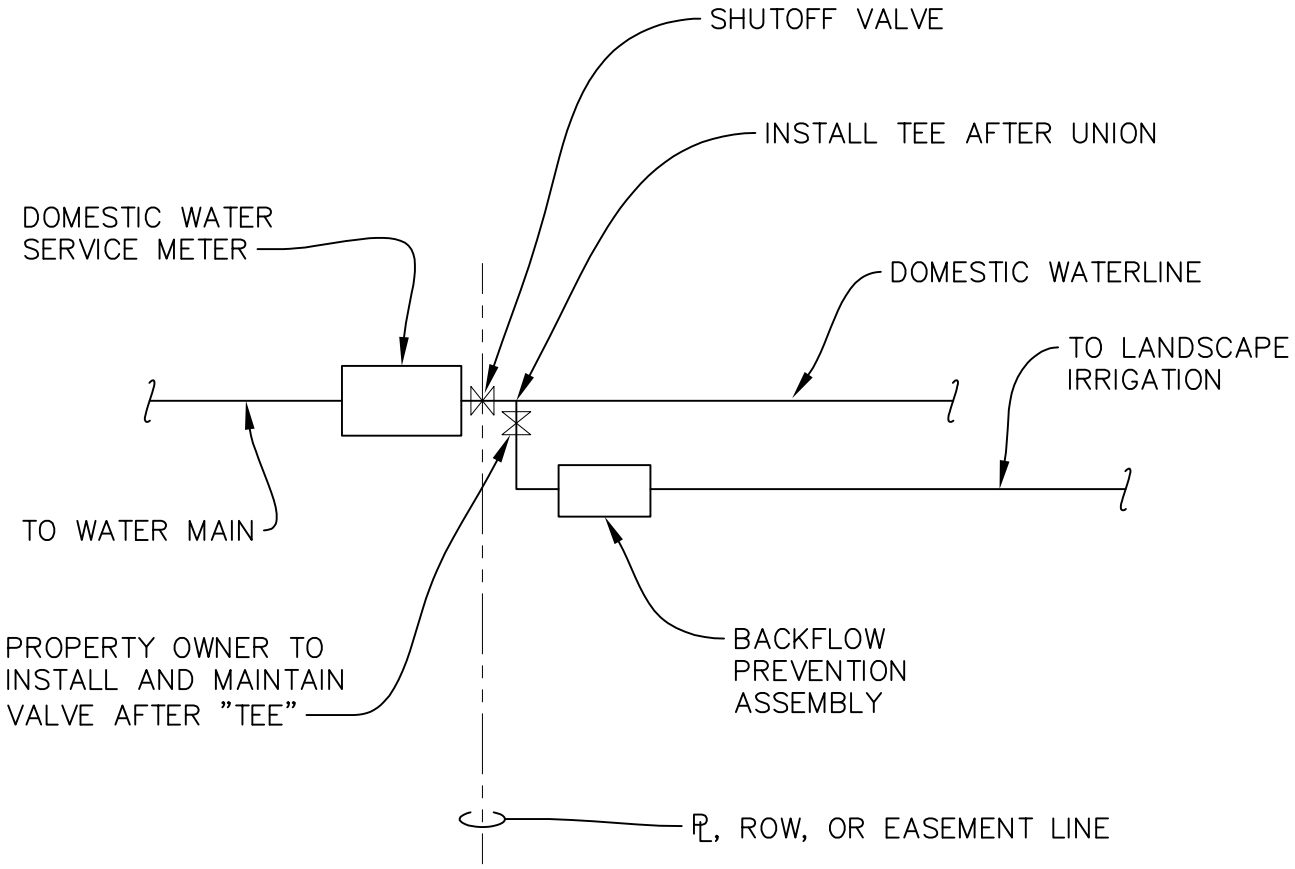


**PLAN**
NTS

**NOTES:**

1. BACKFLOW ASSEMBLY SHALL BE PER DESIGN STANDARDS.
2. THIS DETAIL IS APPLICABLE TO SINGLE FAMILY RESIDENCE ONLY.

| | | | |
|---|---|---|---|
| APPROVED BY CITY ENGINEER: Jacob Jewett | DATE: 01/05/2021 | CITY OF AUBURN WASHINGTON | 3/4" TO 2" IRRIGATION FROM DOMESTIC SERVICE LINE (SINGLE FAMILY) |
| PUBLIC WORKS DEPARTMENT | | | STANDARD DETAIL: W-06.3 |

Plotted by: Craig Dobyns on 12/30/2020 File location: M:\Construction Standard Details\Current Working DWG\Water\STDETL-W-06.3

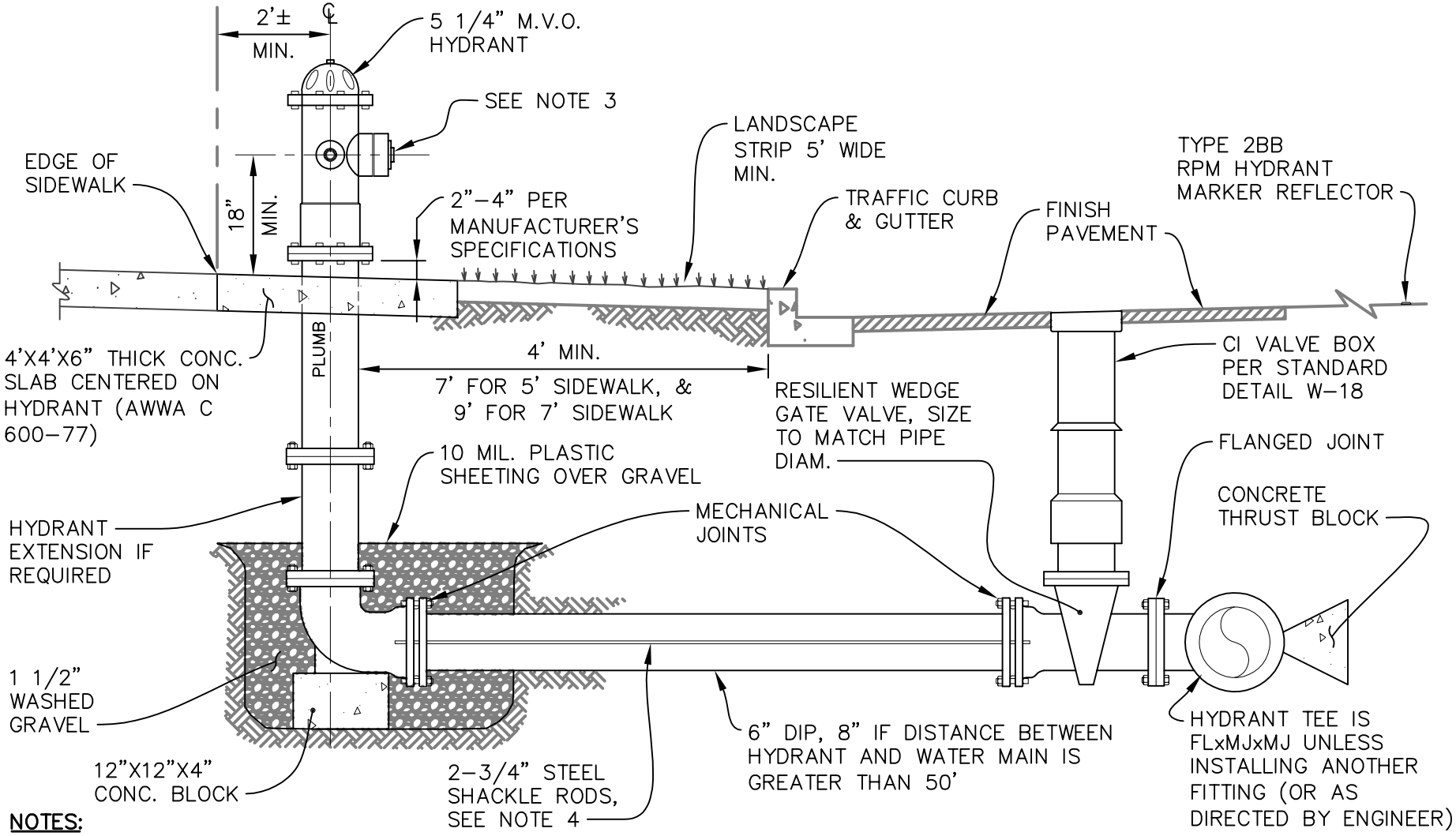


**NOTES:**

1. HYDRANT SHALL BE LOCATED WITHIN THE LANDSCAPE STRIP. WHERE LANDSCAPE STRIP IS NOT PRESENT OR IS LESS THAN 5' WIDE, HYDRANT AND PAD SHALL BE PLACED BEHIND THE SIDEWALK IN R.O.W. OR EASEMENT.
2. WHERE NO CURB & GUTTER IS INSTALLED, FIRE HYDRANT SHALL BE LOCATED (IN RELATION TO STREET CENTER LINE) AS INDICATED ON THE DRAWINGS.
3. HYDRANTS SHALL HAVE 2-2 1/2" NATIONAL STANDARD THREAD (NST) HOSE PORTS & 1-4 1/2" NST WITH 5" STORZ ADAPTER AND CAP.
4. MEGA-LUGS OR PUSH-ON JOINT RESTRAINTS MAY BE USED IN PLACE OF SHACKLE RODS WITH PRIOR ENGINEER APPROVAL.
5. ENSURE 5' MINIMUM CLEARANCE TO OBSTACLES FROM CENTERLINE OF HYDRANT.
6. REMOVE CHAINS.

APPROVED BY CITY ENGINEER: Gary Shierling

DATE: 02/09/2023

CITY OF AUBURN WASHINGTON

5 1/4" M.V.O. HYDRANT SETTING DETAIL

PUBLIC WORKS DEPARTMENT

STANDARD DETAIL: W-07.3

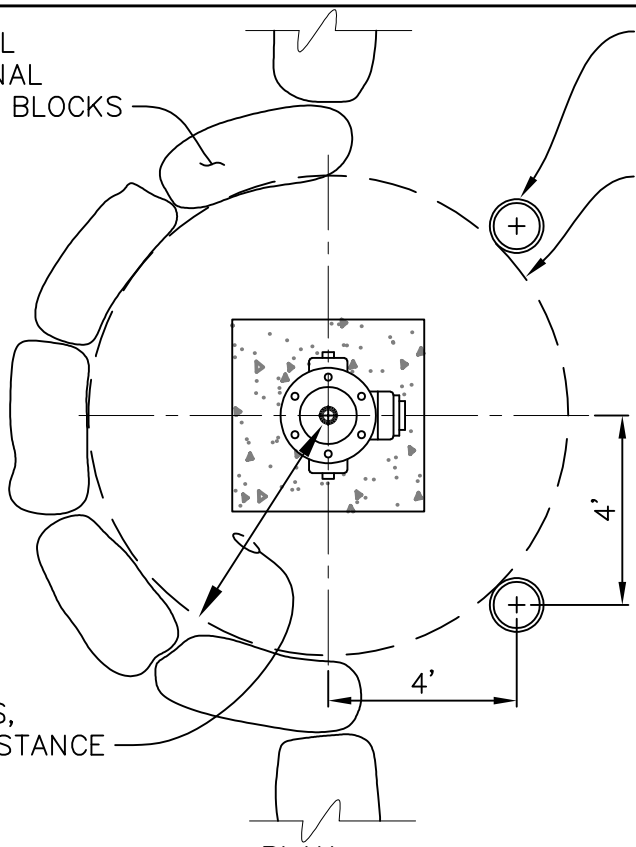


PLAN

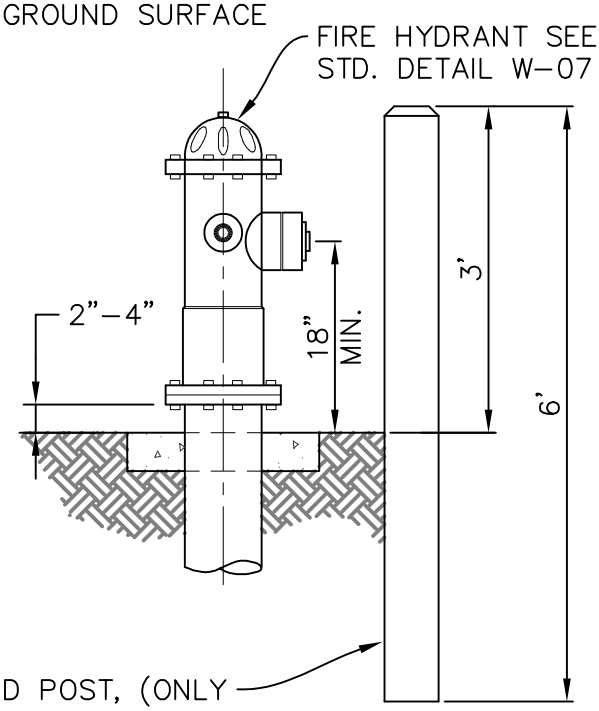


GUARD POST
ELEVATION

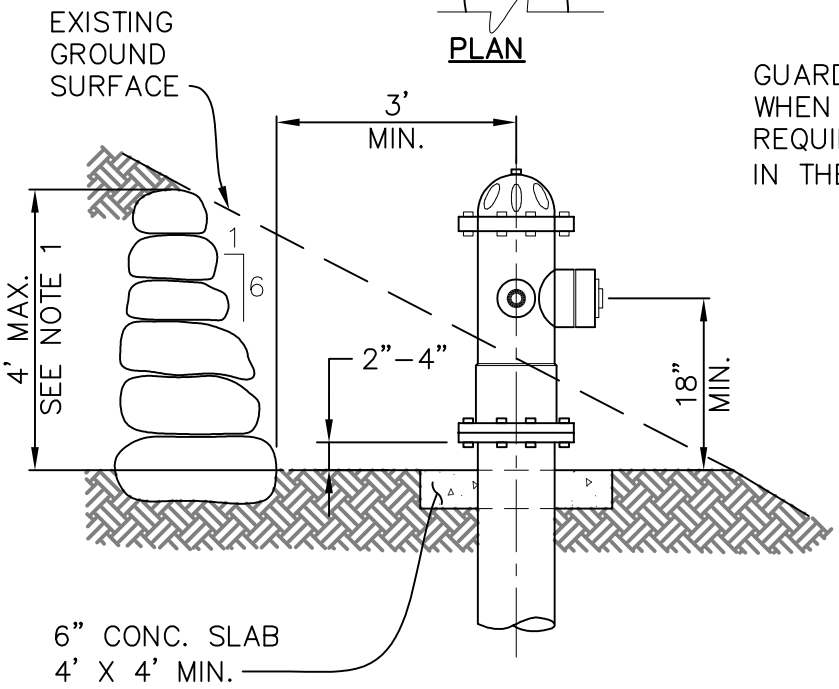


CUT

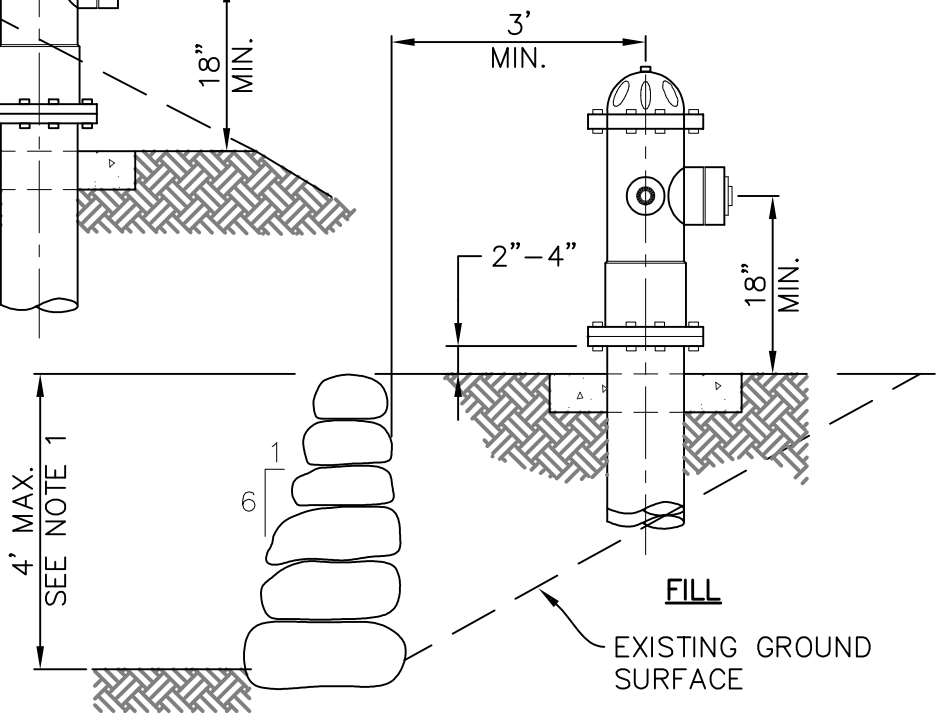


FILL

**NOTES:**

1. SEE PLAN FOR WALLS EXCEEDING 4'-0" IN HEIGHT.

| | | | |
|---|---|---|---|
| APPROVED BY CITY ENGINEER: Jacob Sweeting | DATE: 2/7/24 | CITY OF AUBURN WASHINGTON | FIRE HYDRANT LOCATION IN CUT OR FILL W/ GUARD POSTS |
| PUBLIC WORKS DEPARTMENT | | | STANDARD DETAIL: W-08.3 |

Plotted by: Craig Dobyns on 1/12/2024 File location: M:\Construction Standard Details\Current Working DWG\Water\STDETL-W-08.3

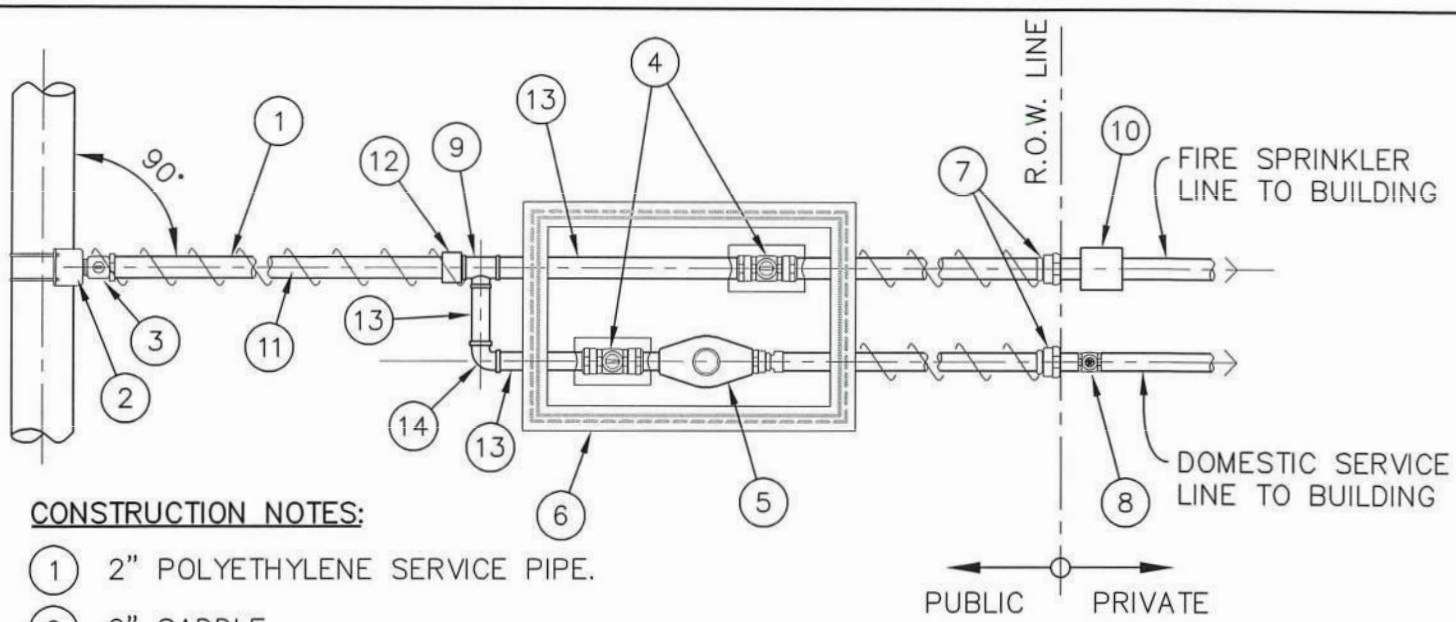


**CONSTRUCTION NOTES:**

1. 2" POLYETHYLENE SERVICE PIPE.
2. 2" SADDLE.
3. 2" CORPORATION STOP.
4. CURB VALVE WITH COUPLINGS AND LOCK WING EARS, ENCASED VERTICALLY BY 3" DIA. SCH. 40 PVC PIPE, NOTCHED AT BOTTOM TO FIT OVER COUPLINGS. FIRE LINE PVC PIPE SHALL BE PAINTED RED TO IDENTIFY AS A FIRE LINE.
5. METER YOLK WITH SPACER PIPE W/ HOLE IN SPACER. DO NOT INSTALL GASKETS.
6. 17"x30" METER BOX.
7. ADAPTER COUPLING, TEMPORARILY CAP IF PRIVATE SIDE CONNECTION IS NOT READY.
8. SHUT OFF VALVE ON DOMESTIC LINE (CUSTOMER TO INSTALL AND MAINTAIN).
9. 2"x2"x*" TEE, WHERE *" IS METER SIZE IN INCHES (1" MINIMUM) FOR DOMESTIC LINE.
10. BACKFLOW PREVENTION ASSEMBLY ON FIRE SPRINKLER LINE (CUSTOMER TO INSTALL AND MAINTAIN).
11. #10 INSULATED COPPER TRACER WIRE.
12. 2" ADAPTER (MIPxCOMP)
13. *" BRASS NIPPLE, LENGTH AS NEEDED.
14. *" BRASS ELBOW

**NOTES:**

1. THIS DETAIL IS APPLICABLE TO SINGLE FAMILY RESIDENCES ONLY.
2. CONNECTION TO CITY WATER MAIN PER CITY OF AUBURN REQUIREMENTS.
3. BACKFLOW PREVENTION ASSEMBLY SHALL BE PER DESIGN STANDARDS.
4. PLANS FOR SEPARATE FIRE SPRINKLER LINE MUST BE SUBMITTED AND APPROVED BY THE FIRE MARSHAL PRIOR TO INSTALLATION.
5. NO DETAIL IS REQUIRED FOR FLOW-THROUGH FIRE SPRINKLER SYSTEMS.
6. SEE STANDARD DETAIL W-15 FOR MATERIAL SCHEDULE.

| | | |
|---|---|---|
| APPROVED BY CITY ENGINEER: DATE: 12/26/19 | City of AUBURN WASHINGTON | 2" FIRE SPRINKLER LINES WITH 3/4" to 2" DOMESTIC SERVICE LINE |
| PUBLIC WORKS DEPARTMENT | | STANDARD DETAIL: W-09.3 |

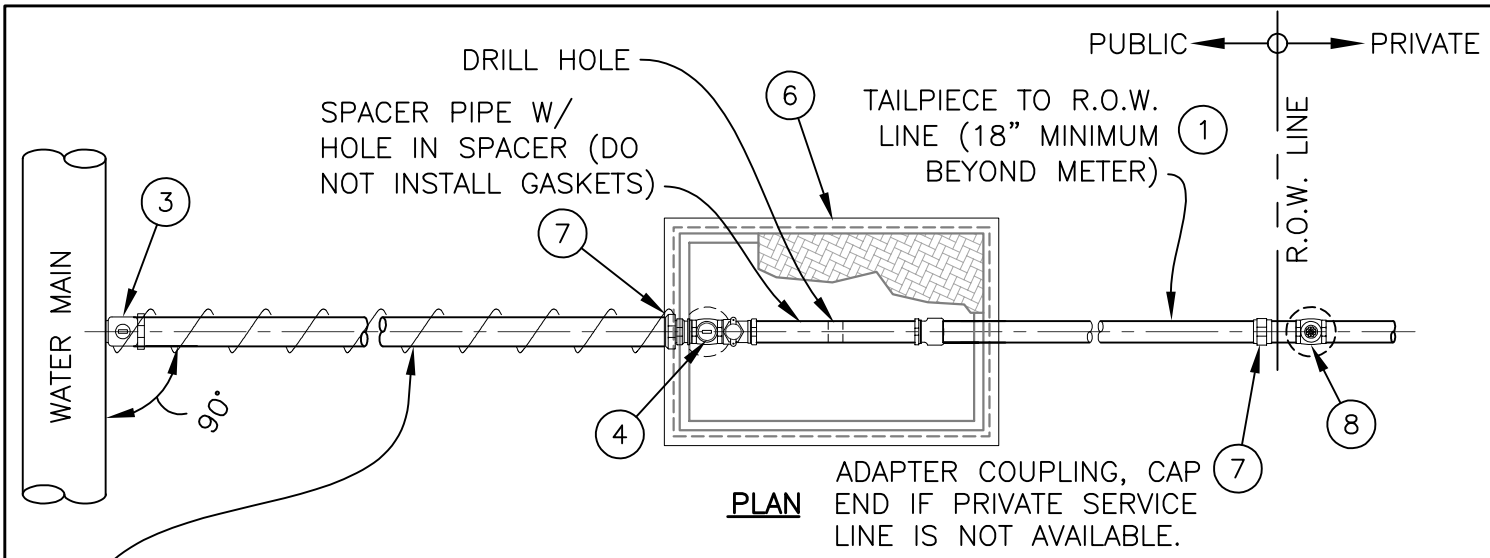


PLAN

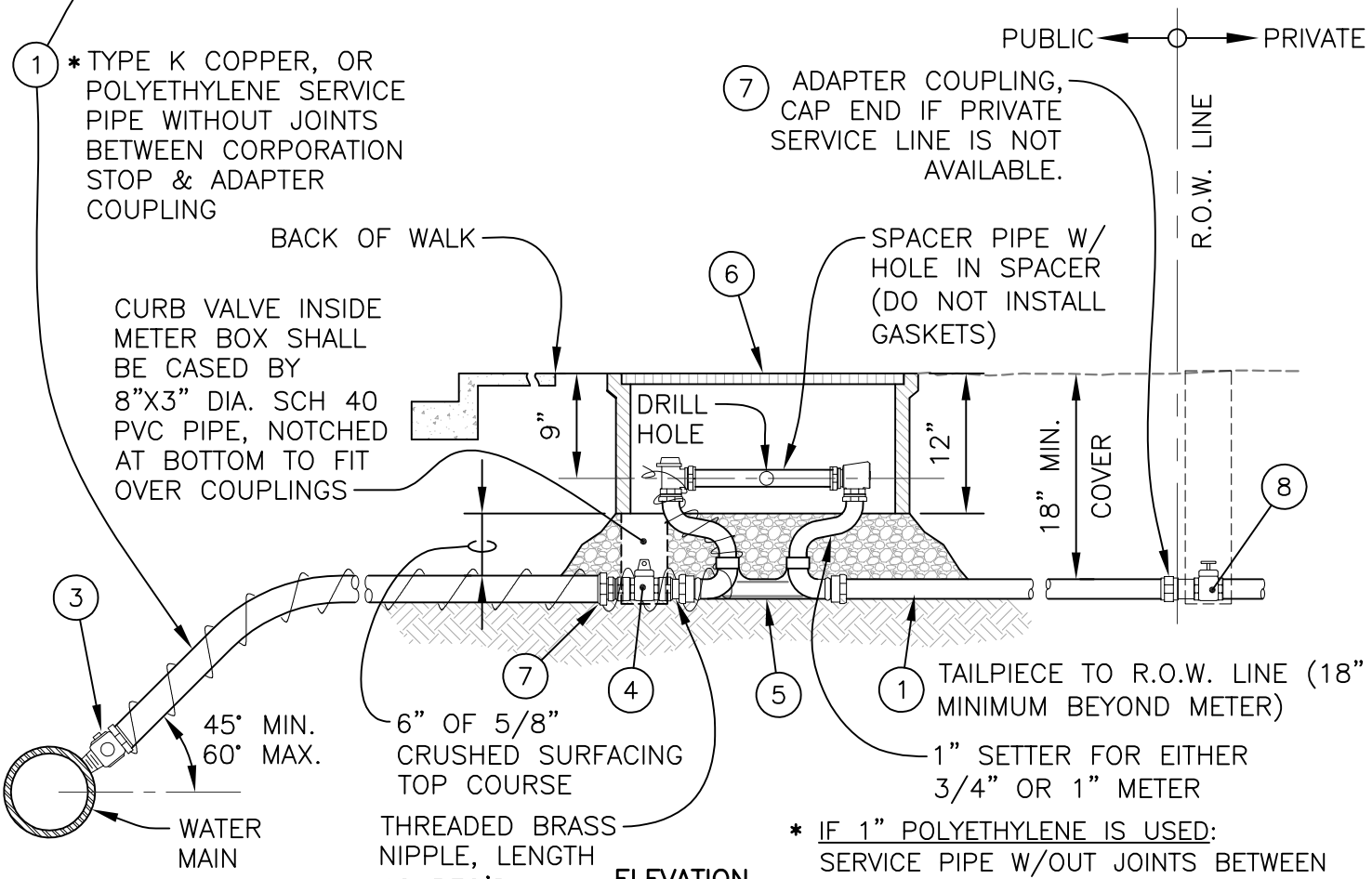


ELEVATION

**NOTES:**

1. SEE STANDARD DETAIL W–15 FOR MATERIAL SCHEDULE.
2. ALL DOMESTIC SERVICE LINES FROM THE WATER MAIN, INCLUDING THE METER YOKE, SHALL BE A MINIMUM OF 1" IN DIAMETER.
3. METER PROVIDED BY CITY, CONNECTIONS MADE FROM EXISTING WATER MAIN SHALL BE INSTALLED BY THE CITY OF AUBURN AND PAID FOR BY THE APPLICANT OR CONTRACTOR.
4. METER LAY LENGTH 1" METER = 10–3/4"

* IF 1" POLYETHYLENE IS USED: SERVICE PIPE W/OUT JOINTS BETWEEN CORP. STOP AND CURB VALVE AND WRAPPED W/ #10 INSULATED COPPER TRACER WIRE. ATTACH BARE TRACER WIRE TO CORP. STOP AND WRAP IT AROUND THE HDPE PIPE AND METER SETTER AS SHOWN W/ HIGH TORQUE SMOOTH STAINLESS STEEL HOSE CLAMPS. A MINIMUM OF 8" BARE WIRE SHALL PROTRUDE PAST CLAMP AT THE METER SETTER

| APPROVED BY CITY ENGINEER: Jacob Freeling | DATE: 2/7/24 | CITY OF AUBURN WASHINGTON | 1" WATER SERVICE INSTALLATION |
|---|---|---|---|
| PUBLIC WORKS DEPARTMENT | | | STANDARD DETAIL: W–13.6 |

Plotted by: Craig Dobyns on 1/24/2024 File location: M:\Construction Standard Details\Current Working DWG\Water\STDETL-W-13.6

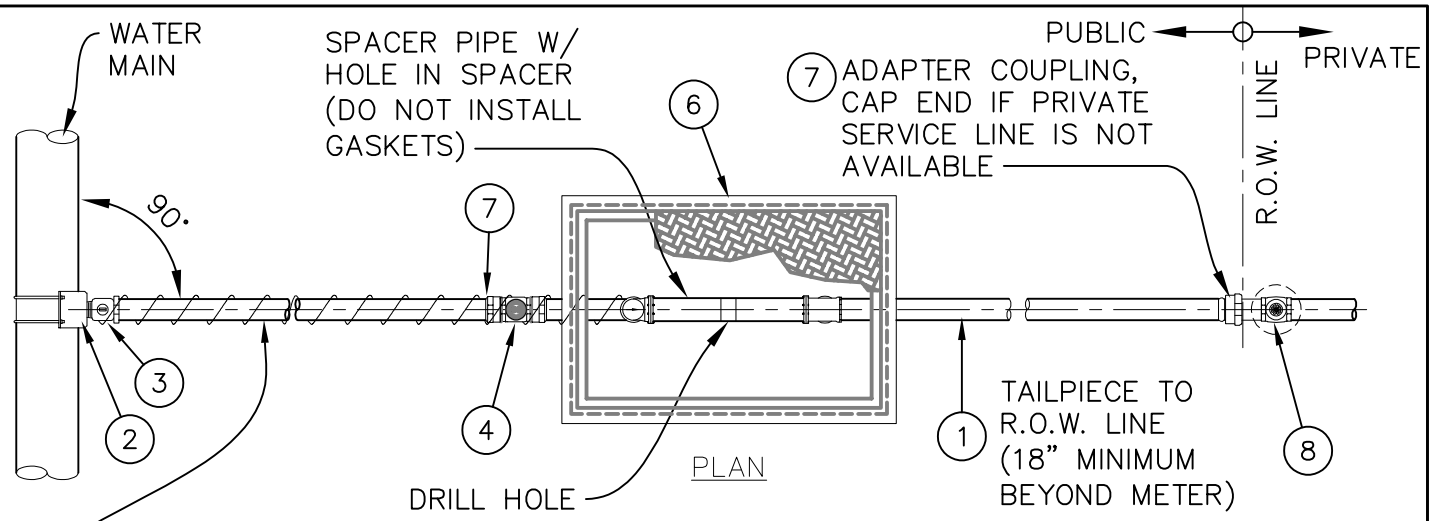


1 SERVICE PIPE W/OUT JOINTS BETWEEN CORP. STOP AND CURB VALVE AND WRAPPED W/ #10 INSULATED COPPER TRACER WIRE. ATTACH BARE TRACER WIRE TO CORP. STOP AND WRAP IT AROUND THE HDPE PIPE AND METER SETTER AS SHOWN W/ HIGH TORQUE SMOOTH STAINLESS STEEL HOSE CLAMPS. A MINIMUM OF 8" BARE WIRE SHALL PROTRUDE PAST CLAMP AT THE METER SETTER

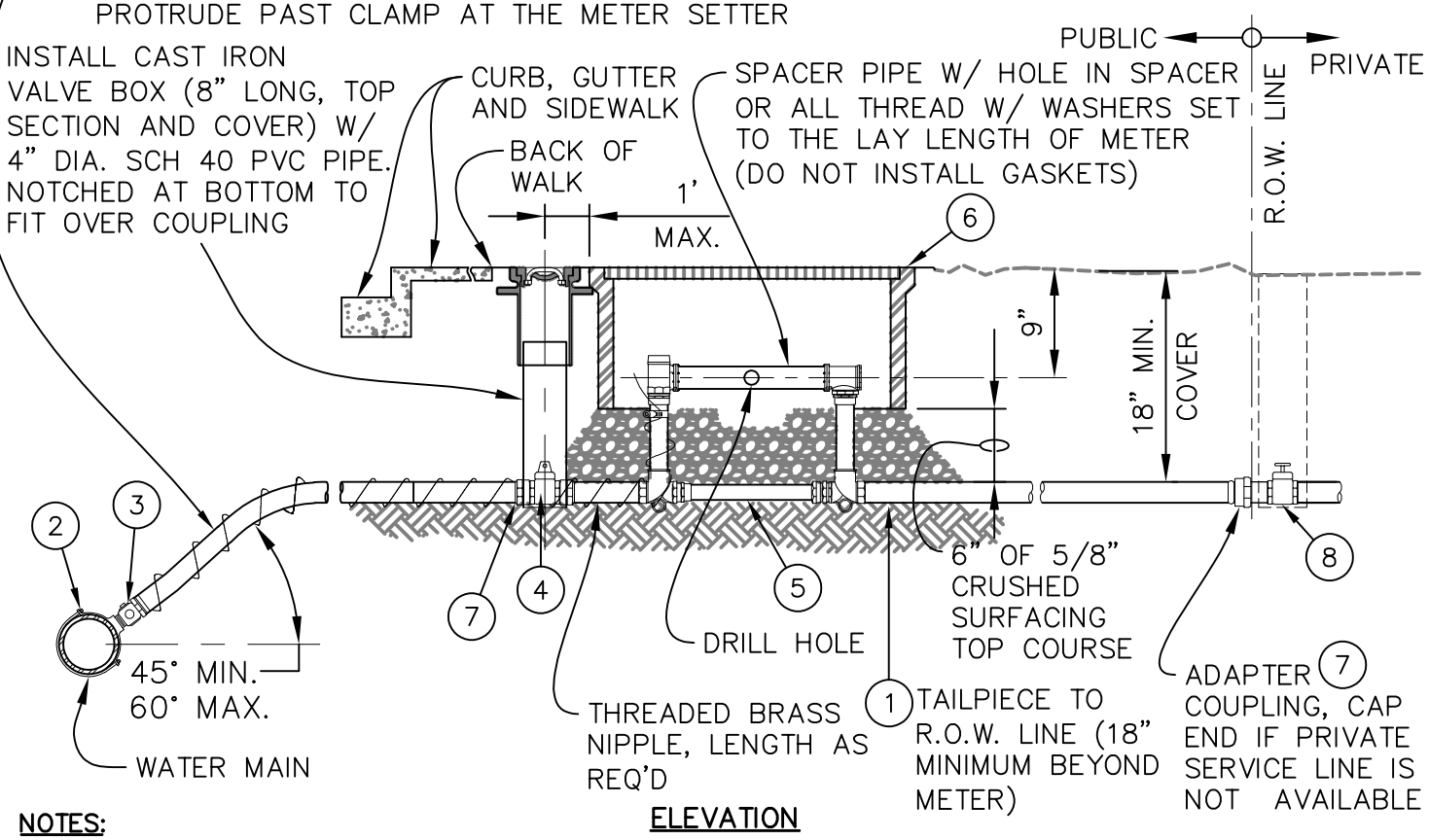


ELEVATION

**NOTES:**

1. SEE STANDARD DETAIL W–15 FOR MATERIAL SCHEDULE.
2. ALL DOMESTIC SERVICE LINES FROM THE WATER MAIN TO THE ADAPTER COUPLING, STRAIGHT COUPLING, OR CURB VALVE, SHALL BE A MINIMUM OF 1" IN DIAMETER.
3. METER PROVIDED BY CITY, CONNECTIONS MADE FROM EXISTING WATER MAIN SHALL BE INSTALLED BY THE CITY OF AUBURN AND PAID FOR BY THE APPLICANT OR CONTRACTOR.
4. METER LAY LENGTHS: 1.5" METER = 13" || 2" METER = 17"

| APPROVED BY CITY ENGINEER: | DATE: | CITY OF AUBURN WASHINGTON | 1 1/2" & 2" WATER SERVICE |
|---|---|---|---|
| Jacob Jewett | 1/17/2022 | | |
| PUBLIC WORKS DEPARTMENT | | | STANDARD DETAIL: W–14.3 |

Plotted by: Craig Dobyns on 1/6/2022 File location: M:\Construction Standard Details\Current Working DWG\Water\STDETL-W-14.3

## WATER SERVICE MATERIAL SCHEDULE

(1) THE CITY OF AUBURN ALLOWS 1" TO 2" POLYETHYLENE SDR-9 (IN COPPER TUBE SIZES) W/ STAINLESS STEEL LINERS IN ALL COUPLINGS & WRAPPED W/ A #10 INSULATED COPPER TRACER WIRE WRAPPED AROUND HDPE PIPE AS SHOWN. FOR 1" COPPER, IT SHALL BE TYPE K COPPER TUBING W/OUT TRACER WIRE FOR WATER SERVICE & TAILPIECE CONNECTION, IN ACCORDANCE W/ STANDARD SPECIFICATION SECTION 9-30.6(3). ALL CONNECTIONS TO POLYETHYLENE OR COPPER TUBING SHALL BE W/ MUELLER 110 COMPRESSION CONNECTIONS OR EQUAL. TAILPIECE SHALL EXTEND TO R.O.W. LINE (18" MINIMUM BEYOND METER) & SHALL BE THE SAME SIZE AS THE SERVICE LINE.

(2) SADDLES FOR 1", 1-1/2", OR 2" PIPE TAPS SHALL BE EPOXY COATED OR E-COATED DUCTILE IRON W/ DOUBLE STAINLESS STEEL STRAPS & NEOPRENE GASKETS. SADDLES SHALL HAVE I.P.S. FEMALE THREADS.

(8) CONTRACTOR SHALL FURNISH & INSTALL PRIVATE SERVICE LINE SHUT-OFF VALVE & RISER. FOR CAPITAL PROJECTS, SEE CONTRACT DOCUMENTS, OTHERWISE PROPERTY OWNER TO INSTALL PRIVATE SERVICE LINE SHUT-OFF VALVE AT POINT OF CONNECTION.

**METER LOCATIONS:**

1. WHERE LANDSCAPE STRIPS ARE PLANNED OR EXIST, THE METER & METER BOX WILL BE PLACED BETWEEN THE BACK OF THE CURB & THE SIDEWALK, ADJACENT TO THE SIDEWALK IF ROOM PERMITS;
2. WHERE THE SIDEWALK IS LOCATED ADJACENT TO THE BACK OF THE CURB OR THE LANDSCAPE STRIP IS TOO NARROW TO ACCOMMODATE THE METER BOX, THE METER & METER BOX WILL BE PLACED ADJACENT TO & AT THE BACK OF SIDEWALK;
3. WHERE METERS & METER BOXES ARE LOCATED IN THE STREET OR SIDEWALK OR IN LOCATIONS WHICH ARE SUBJECTED TO VEHICULAR TRAFFIC, INCLUDING DRIVEWAYS, ETC., A TRAFFIC BEARING METER BOX & LID OF APPROPRIATE LOAD RATING SHALL BE PROVIDED AS SPECIFIED (EAST JORDAN IRON WORKS, OR EQUAL).
4. LOCATE CURB VALVE IN THE METER BOX WHERE POSSIBLE & 1 FT. OUTSIDE IF NO ROOM INSIDE METER BOX IS AVAILABLE.
5. OFF STREET METER LOCATION SHALL BE APPROVED BY THE CITY.

| SCHEDULE NO. & PART | SERVICE LINE SIZE & MUELLER/AY McDONALD/FORD CATALOG NO. OR APPROVED EQUAL | | |
|---|---|---|---|
| | 1" | 1-1/2" | 2" |
| (3) CORP. STOP | DIRECT TAP OPTION: MUELLER B-25008N, AY McDONALD 74701BQ, OR FORD FB1000-4-Q-NL<br>SADDLE OPTION: MUELLER B-20013N W/ H-15451N OUTLET COUPLING, AY McDONALD 73131B W/ 74754Q OUTLET COUPLING, OR FORD FB500-4-NL W/ C14-44-Q-NL OUTLET COUPLING | MUELLER B-2969N W/ H-15451N OUTLET COUPLING, AY McDONALD 73131B W/ 74754Q, OR FORD FB500-6-NL W/ C14-66-Q-NL OUTLET COUPLING | MUELLER B-2969N W/ H-15451N OUTLET COUPLING, AY MCDONALD 73131B W/ 74754Q, OR FORD FB500-7-NL W/ C14-77-Q-NL OUTLET COUPLING |
| (4) CURB VALVE | MUELLER B-20200N, AY McDONALD 76101W, OR FORD B11-444W-NL | MUELLER B-20200N, AY MCDONALD 76101W, OR FORD B11-666W-NL | MUELLER B-20200N, AY MCDONALD 76101W, OR FORD B11-777W-NL |
| (5) METER YOKE | MUELLER B-2404R-2N W/ H-14222N INLET & H-14227N OUTLET COUPLINGS, 12" RISER OR AY McDONALD 723-412WDDQ44 W/ MUELLER H-10879 5/8"x3/4"x1", AY McDONALD 710J24KIT, OR FORD VBH74-12W-14-44-Q-NL ADAPTERS FOR 3/4" METERS | MUELLER B-2423-2N W/ H-15428N OUTLET COUPLING, AY McDONALD 720B612WDFF 665.8 W/ 74753Q, OR FORD VBH76-12B-11-66-NL W/ C84-66-Q-NL OUTLET COUPLING, 12" RISER | MUELLER B-2423-2N W/ H-15428N OUTLET COUPLING, AY MCDONALD 720B612WDFF 775.8 W/ 74753Q OR FORD VBH77-12B-11-77-NL W/ C84-77-Q-NL OUTLET COUPLING, 12" RISER |
| (6) METER BOX | HUBBELL QUAZITE OR ARMORCAST (NOT PERMITTED FOR USE IN PEDESTRIAN PATHWAYS) 13"x24"x12" POLYMER CONCRETE BOX & COVER W/ READER LID & 2" AMR PORT W/ (2) 2 ½ X 3 MOUSEHOLES (BO3132412M) | HUBBELL QUAZITE OR ARMORCAST (NOT PERMITTED FOR USE IN PEDESTRIAN PATHWAYS), 17"x30"x12" POLYMER CONCRETE BOX & COVER W/ READER LID & 2" AMR PORT & W/ (2) 2 ½ x 3 MOUSEHOLES (BO3173012M) | |
| (7) COUPLING | MUELLER H-15428N, AY McDONALD 74753Q, OR FORD C84-44-Q-NL | MUELLER H-15428N, AY McDONALD 74753Q OR FORD C84-66-Q-NL | MUELLER H-15428N, AY McDONALD 74753Q, OR FORD C84-77-Q-NL |
| (8) SHUT-OFF VALVE | MUELLER B-20200N W/ B-20298-99000 LEVER HANDLE, OR AY McDONALD 76101W W/ 6120B LEVER HANDLE W/ 10" IRRIGATION BOX AND 8" PVC RISER | | |

APPROVED BY CITY ENGINEER: Jacob Sweeting DATE: 2/7/24

CITY OF AUBURN WASHINGTON

WATER METER LOCATION & MATERIAL SCHEDULE

PUBLIC WORKS DEPARTMENT

STANDARD DETAIL: W-15.8

Plotted by: Craig Dobyns on 1/24/2024 File location: M:\Construction Standard Details\Current Working DWG\Water\STDETL-W-15.8

| METER SIZE | MAIN LINE | BYPASS | METER LENGTH FLG. TO FLG. | MIN. LENGTH | MIN. WIDTH | MIN. HEIGHT | OLDCASTLE VAULT MODEL** | GRANITE VAULT MODEL** |
|---|---|---|---|---|---|---|---|---|
| 3" | 3" D.I.P. | 3" D.I.P. | 17" | 8'–4" | 4'–4" | 6'–2" | 4484–LA | 4x8 MV |
| 4" | 4" D.I.P. | 4" D.I.P. | 20" | 8'–4" | 4'–4" | 6'–2" | 4484–LA | 4x8 MV |
| 6" | 6" D.I.P. | 6" D.I.P. | 24" | 10'–6" | 5'–0" | 6'–2" | 5106–LA | 5x10 MV |
| 8" | 8" D.I.P. | 8" D.I.P. | 30 1/8" | 12'–0" | 6'–0" | 6'–5" | 612–LA | 6x12 MV |
| 10" | 10" D.I.P. | 10" D.I.P. | 41 7/8" | 14'–0" | 8'–0" | 6'–5" | 814–LA | 8x14 MV |

** OR APPROVED EQUAL

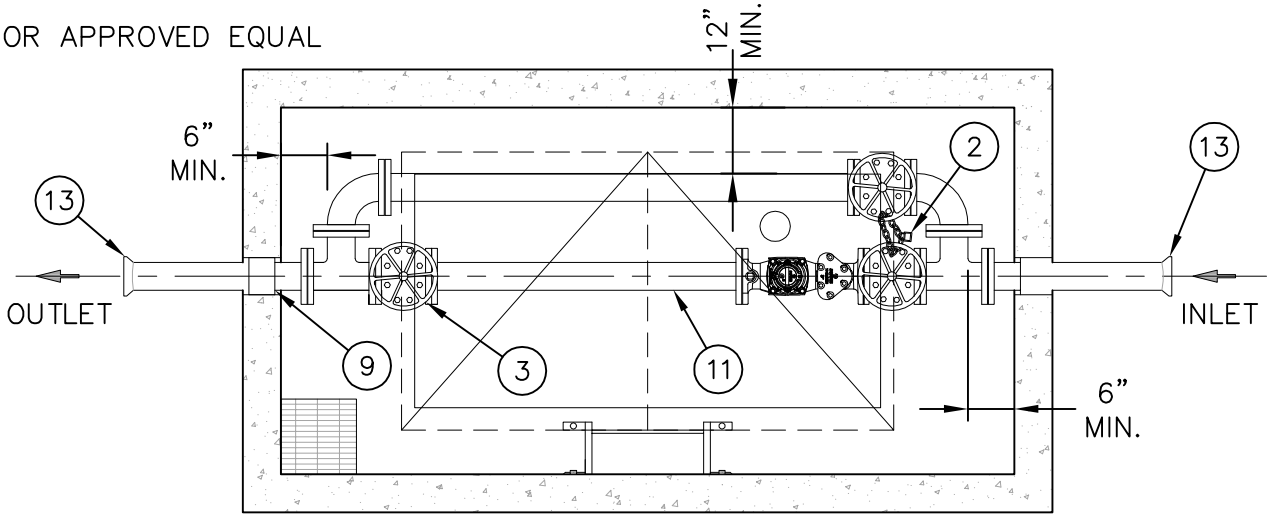


**PLAN**

NTS

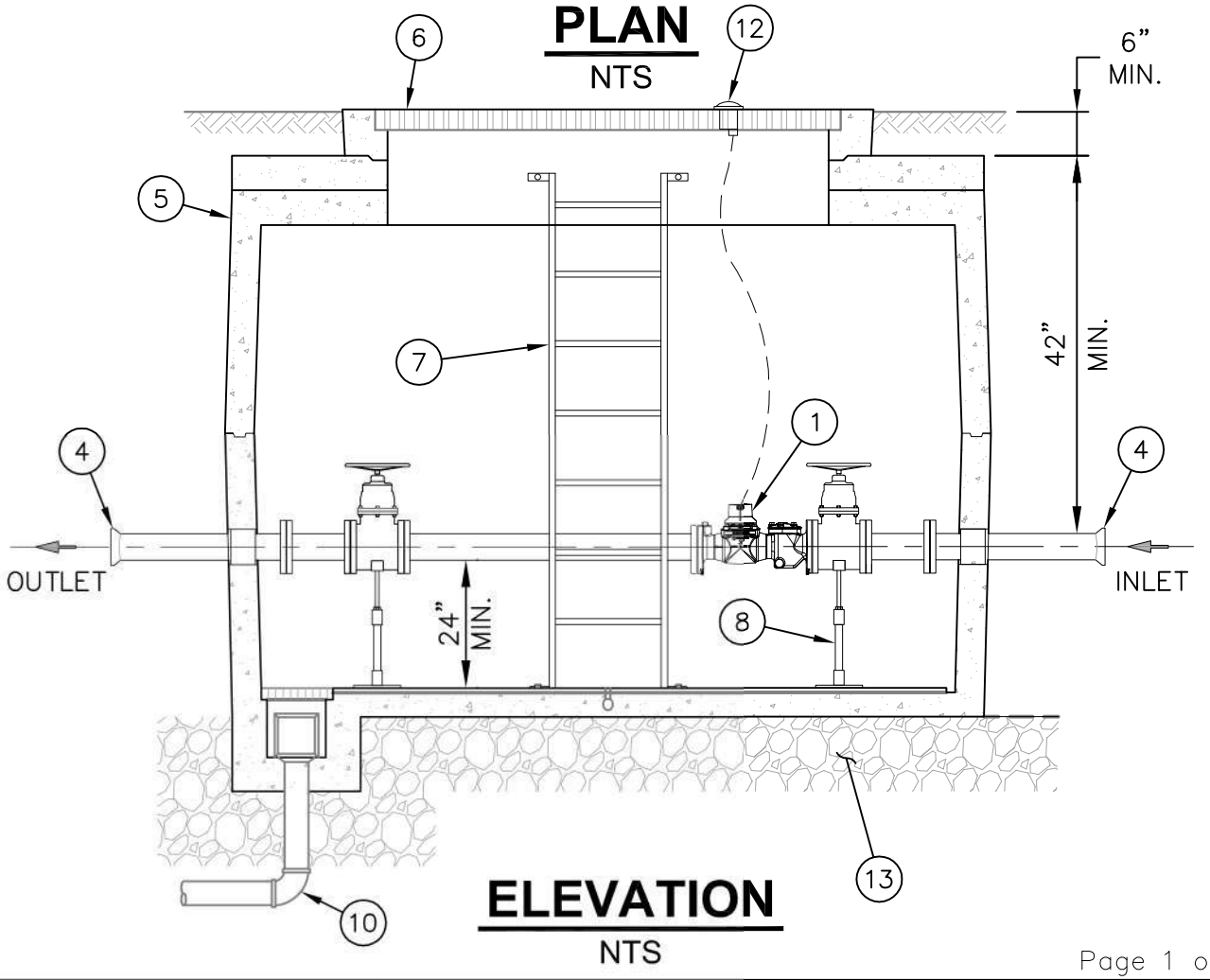


**ELEVATION**

NTS



| APPROVED BY CITY ENGINEER: | DATE: | CITY OF AUBURN WASHINGTON | 3" OR LARGER WATER METER INSTALLATION |
|---|---|---|---|
| PUBLIC WORKS DEPARTMENT | | | STANDARD DETAIL: W–16.3 |

Plotted by: Craig Dobyns on 12/10/2020 File location: M:\Construction Standard Details\Current Working DWG\Water\STDETL–W–16.3

## BILL OF MATERIALS

| PART NO. | QUANTITY | DESCRIPTION |
|---|---|---|
| 1 | 1 | METER PROVIDED BY CITY FOR CONTRACTOR INSTALLATION: SENSUS OMNI C2 COMPOUND METER OR APPROVED EQUAL FLANGED WITH BUILT-IN STRAINER AND ENCODERS COMPATIBLE WITH CURRENT SENSUS AMR/AMI SYSTEM |
| 2 | 1 | LOCK WITH CHAINS |
| 3 | 3 | AWWA C-509 OR C-515 GATE VALVE COMPLETE WITH HAND WHEEL |
| 4 | 2 | FIRST JOINT OUTSIDE VAULT REQUIRES FIELD LOK GASKET OR OTHER FORM OF JOINT RESTRAINT |
| 5 | 1 | PRECAST CONCRETE VAULT COMPLETE WITH COLLAR, C555 WHITE INTERIOR PAINT |
| 6 | 1 | 36"x72" ALUMINUM HATCH H20-44 CLASS B, STATIC LOADING WITH HOLD OPEN ARM |
| 7 | 1 | O.S.H.A. APPROVED SAFETY LADDER W/ TELESCOPING SAFETY POST (IF VAULT IS OVER 30" DEEP). BOLT LADDER TO VAULT FLOOR AND TO VAULT WALL |
| 8 | 2 | GALVANIZED STEEL ADJUSTABLE PIPE SUPPORT |
| 9 | 2 | MEGALUG OR ROMAGRIP SEALED IN CONCRETE FILLING KNOCKOUT |
| 10 | 1 | SUMP DRAIN, CONNECT TO CITY STORM SYSTEM, IF GRAVITY DRAIN IS NOT FEASIBLE, A SUMP PUMP WITH CHECK VALVE ON DISCHARGE LINE IS REQUIRED |
| 11 | 1 | SPOOL, MINIMUM LENGTH 2'-0", ONE END OF SPOOL TO BE INSTALLED WITH A UNI-FLANGE W/ RESTRAINT LUGS. |
| 12 | 1 | 2" AMR PORT |
| 13 | AS REQ'D | 5/8" MINUS CRUSHED ROCK FOUNDATION WITH COMPACTED DEPTH OF 12" MINIMUM |

STANDARD FABRICATION & FINISHING SPECIFICATION

1. ALL STEEL PIPE SHALL BE SANDBLASTED, EPOXY LINED AND COATED TO AWWA C-120 AND NSF-61 SPECIFICATIONS. FINISH COATING SHALL BE BLUE ENAMEL.
2. GATE VALVE ON THE BYPASS SHALL BE NORMALLY CLOSED AND LOCKED WITH THE GATE VALVE ON THE MAIN LINE AS SHOWN AND KEYS GIVEN TO THE CITY.
3. DUCTILE IRON PIPE SHALL BE ACCORDING TO 9-30.1(1) OF THE STANDARD SPECIFICATIONS.

APPROVED BY CITY ENGINEER: [signature]

DATE: 01/05/2021

CITY OF AUBURN WASHINGTON

3" OR LARGER WATER METER INSTALLATION

PUBLIC WORKS DEPARTMENT

STANDARD DETAIL: W-16a.4

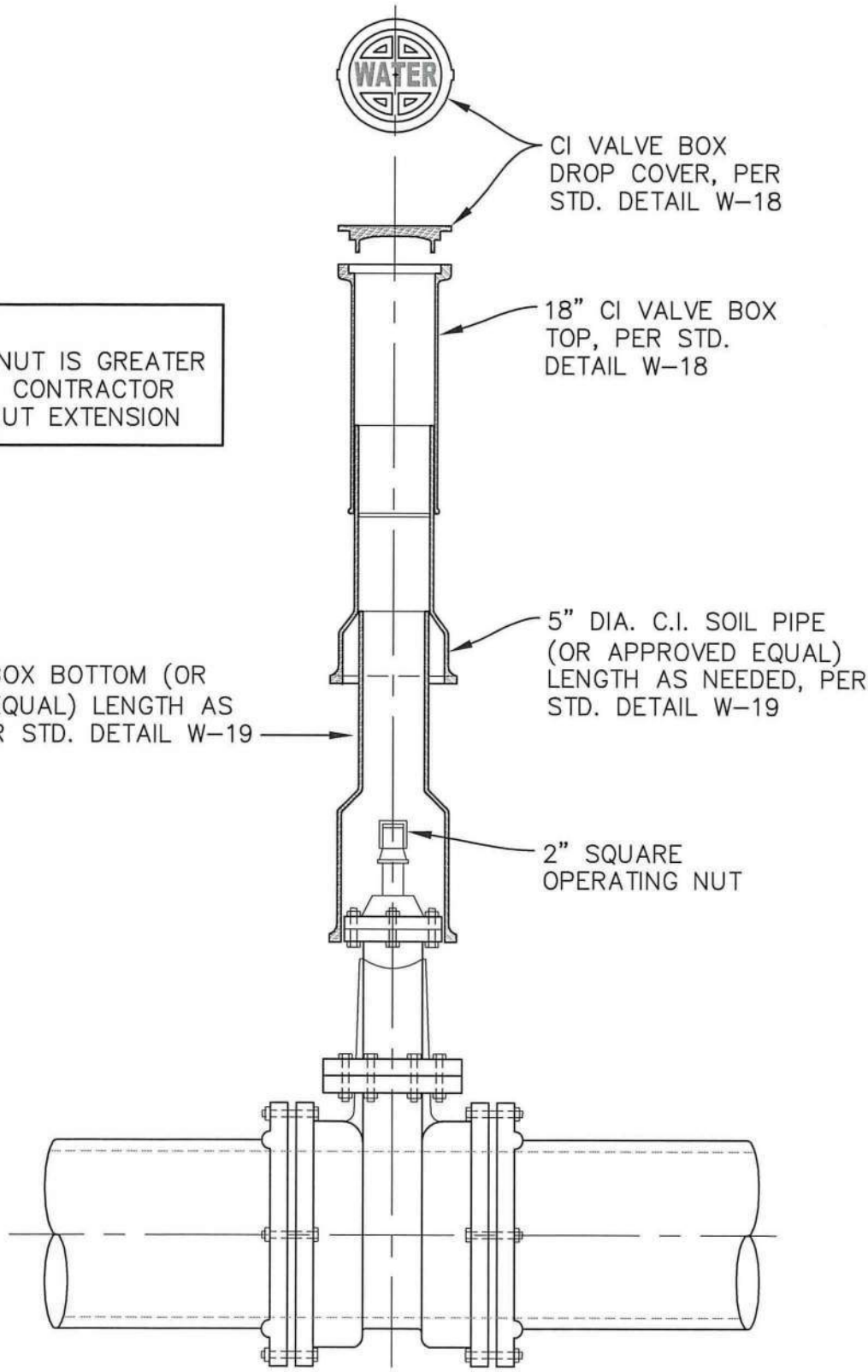


NOTE:
IF DEPTH OF NUT IS GREATER THAN 7 FEET, CONTRACTOR TO PROVIDE NUT EXTENSION

| | | | |
|---|---|---|---|
| APPROVED BY CITY ENGINEER: | DATE: 8/5/2016 | CITY OF AUBURN WASHINGTON | VALVE WRENCH EXTENSION BOX |
| COMMUNITY DEVELOPMENT & PUBLIC WORKS DEPT. | | | STANDARD DETAIL: W-17.1 |

Plotted by: Craig Dobyns on 7/13/2016 File location: M:\Construction Standard Details\Approved Drawing Files (dwg)\Water\STDETL-W-17.1

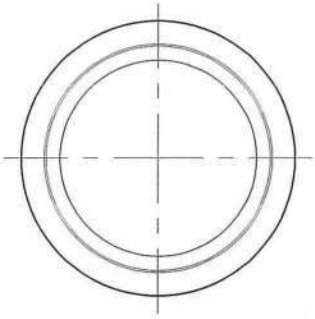

TOP VIEW

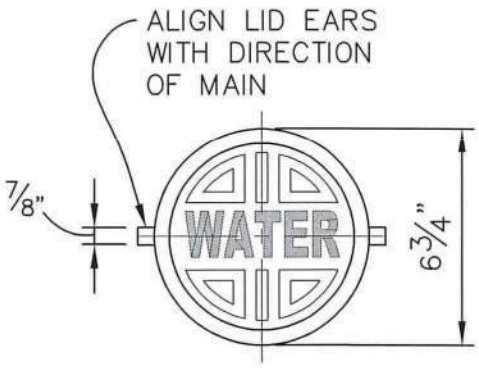


TOP VIEW

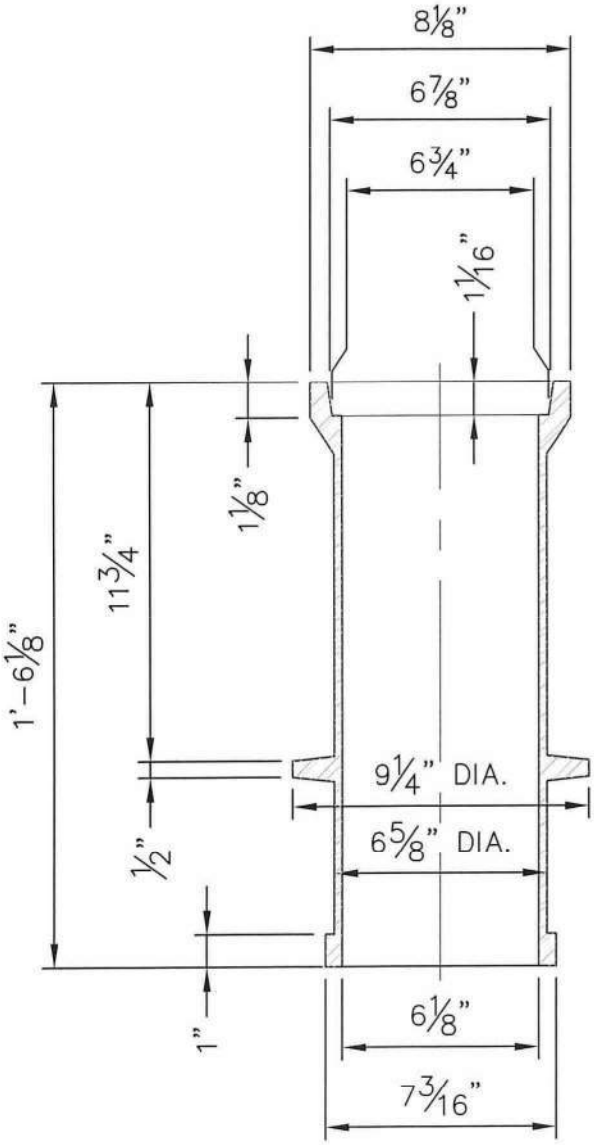


## 18" CAST IRON VALVE BOX TOP & COVER

NOT TO SCALE

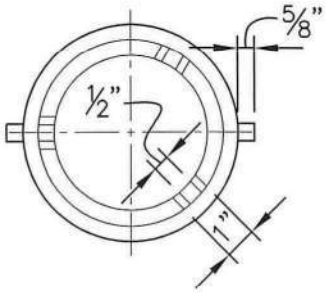


BOTTOM VIEW

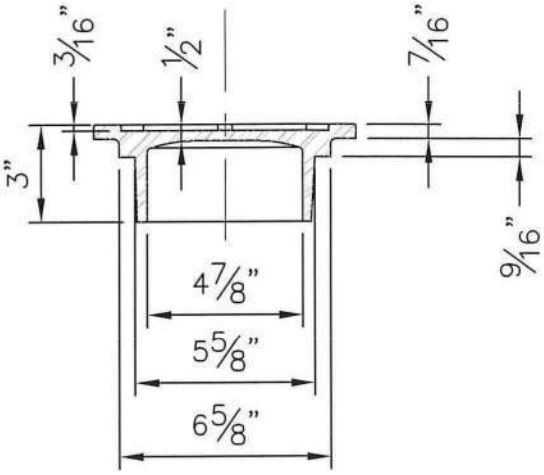


## VALVE BOX DROP COVER

NOT TO SCALE

| | | |
|---|---|---|
| APPROVED BY CITY ENGINEER: Jacob Sweeting DATE: 12/20/19 | CITY OF AUBURN WASHINGTON | C.I. VALVE BOX TOP & VALVE BOX COVER |
| PUBLIC WORKS DEPARTMENT | | STANDARD DETAIL: W-18.3 |

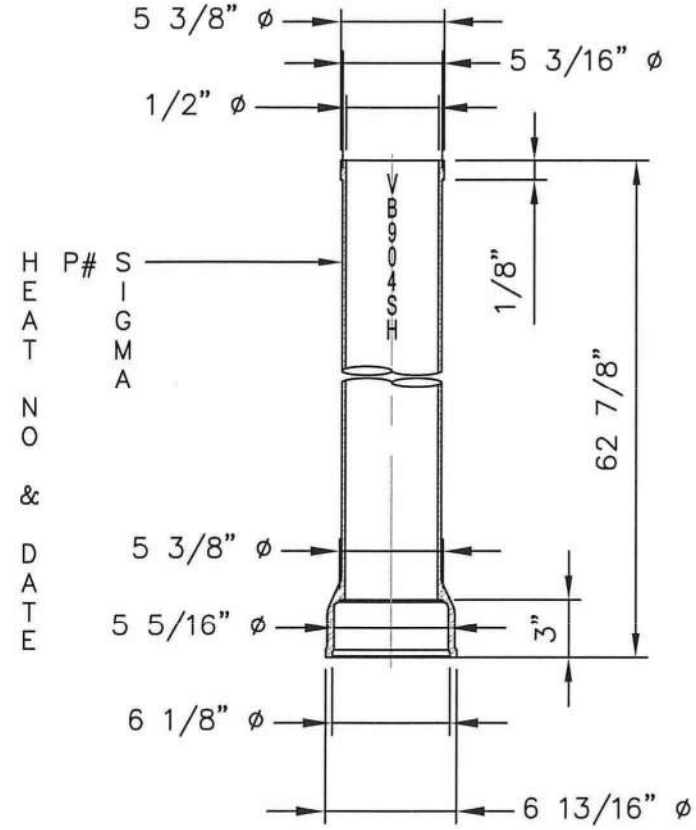


SINGLE HUB 5" C.I. SOIL PIPE VALVE BOX EXTENSION

NOT TO SCALE

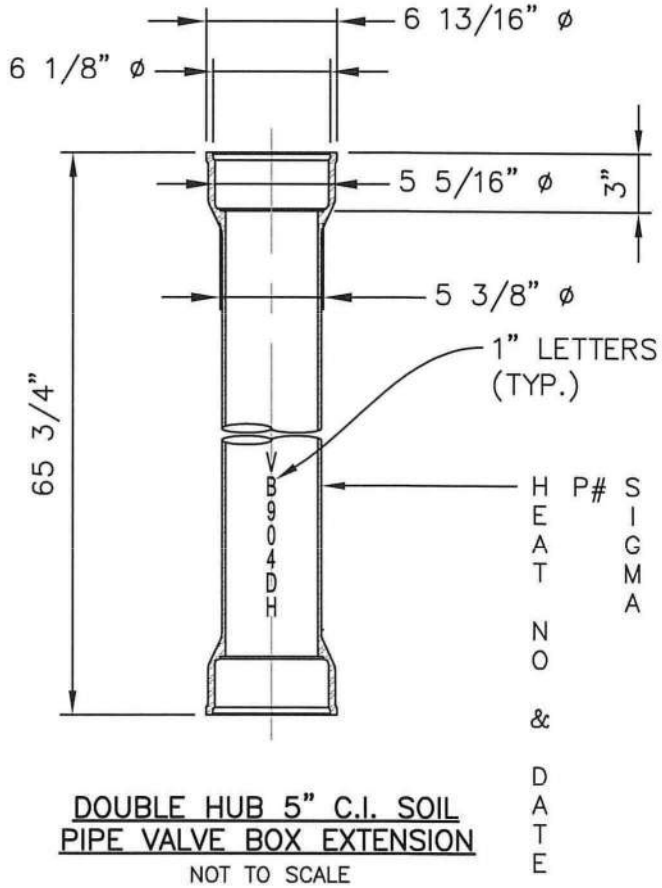


DOUBLE HUB 5" C.I. SOIL PIPE VALVE BOX EXTENSION

NOT TO SCALE

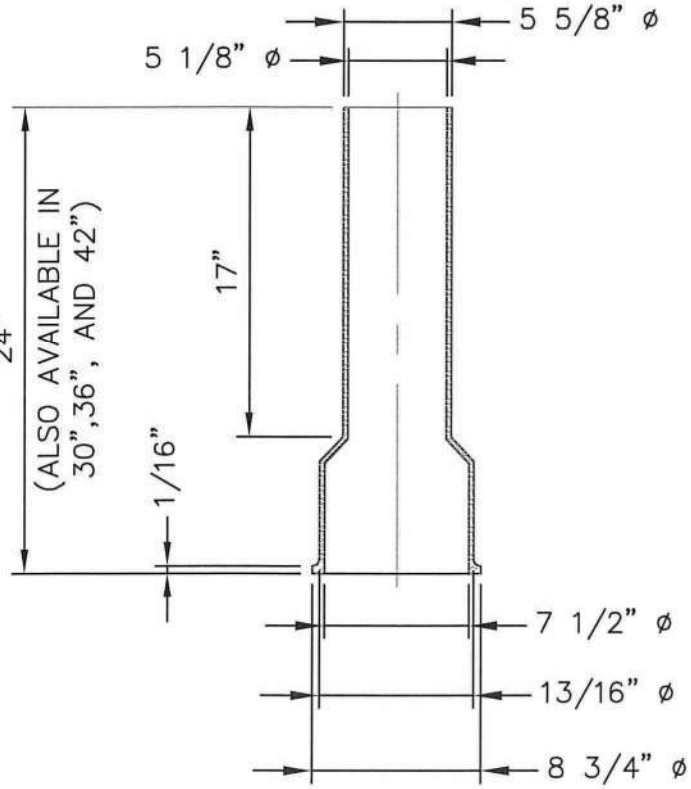


C.I. VALVE BOX BOTTOM

NOT TO SCALE

| APPROVED BY CITY ENGINEER: | DATE: 8/5/2016 | CITY OF AUBURN WASHINGTON | 5" C.I. SOIL PIPE VALVE BOX EXTENSION & C.I. VALVE BOX BOTTOM |
|---|---|---|---|
| COMMUNITY DEVELOPMENT & PUBLIC WORKS DEPT. | | | STANDARD DETAIL: W-19.1 |

Plotted by: Craig Dobyne on 7/13/2016 File location: N:\Construction Standard Details\Approved Drawing Files (dwg)\Water\STDETL-W-19.1

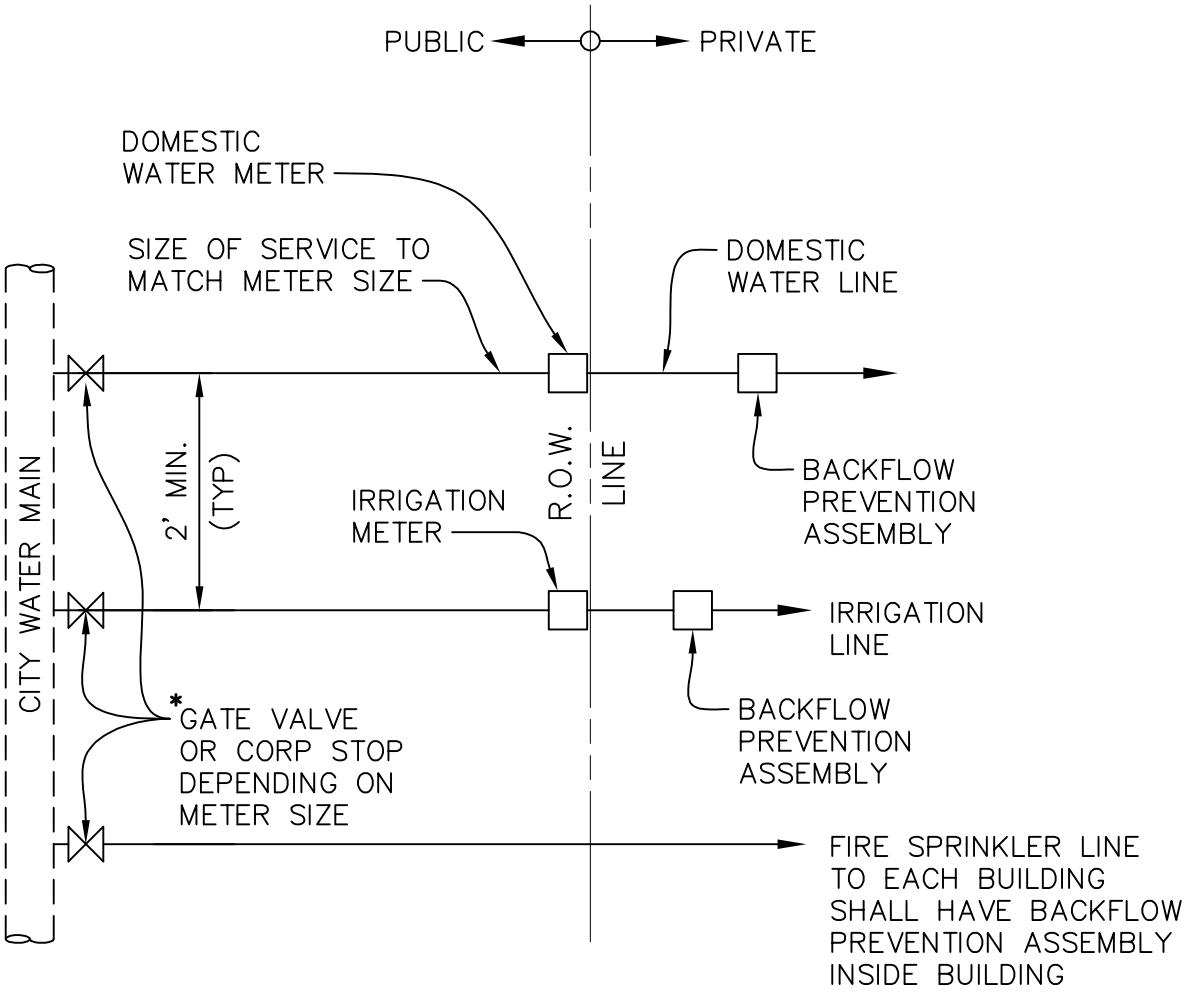


NOTES:

1. CONNECTION TO CITY WATER MAIN PER CITY OF AUBURN REQUIREMENTS.
2. BACKFLOW ASSEMBLY IS REQUIRED ON FIRE SPRINKLER, DOMESTIC, & IRRIGATION LINES. TYPE OF ASSEMBLY SHALL BE PER DESIGN STANDARDS.
3. PLANS FOR SEPARATE FIRE SPRINKLER LINE MUST BE SUBMITTED & APPROVED BY THE FIRE MARSHAL PRIOR TO INSTALLATION, AND SHALL BE DESIGNED BY A FIRE PROTECTION ENGINEER.

* FOR METERS 2" OR LESS USE CORP STOP & FOR METERS LARGER THAN 2" USE GATE VALVE WITH 2" STANDARD OPERATING NUT & COA VALVE BOX TO SURFACE.

| | | | |
|---|---|---|---|
| APPROVED BY CITY ENGINEER: Jacob Jewett | DATE: 01/05/2021 | CITY OF AUBURN WASHINGTON | NON-SINGLE FAMILY SERVICE LINES |
| PUBLIC WORKS DEPARTMENT | | | STANDARD DETAIL: W-20.3 |

Plotted by: Craig Dobyns on 12/30/2020 File location: M:\Construction Standard Details\Current Working DWG\Water\STDETL-W-20.3

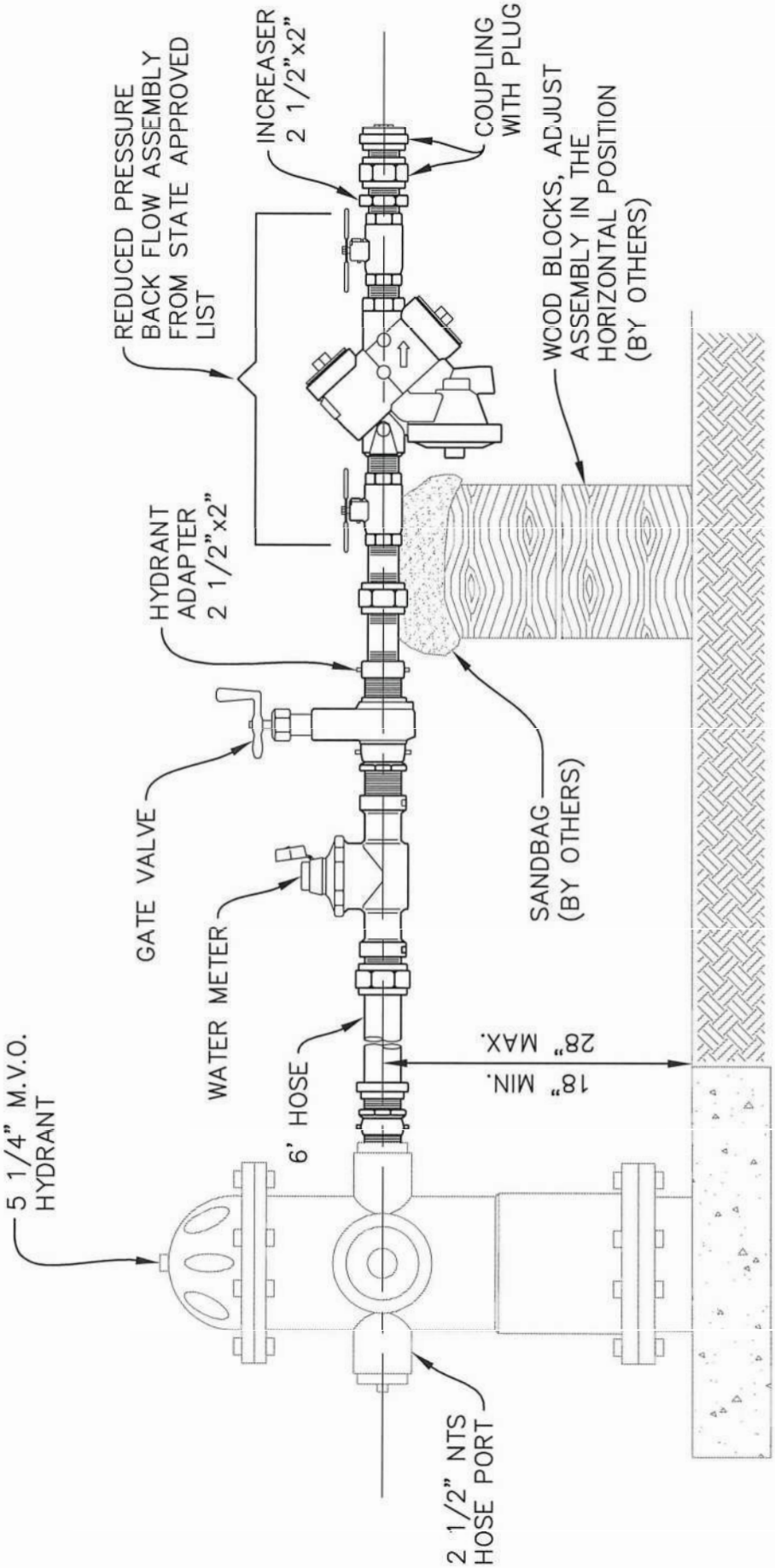


| | | | |
|---|---|---|---|
| APPROVED BY CITY ENGINEER: | DATE: 8/5/2016 | CITY OF AUBURN WASHINGTON | TEMP. COMBINATION HYDRANT METER/ REDUCED PRESSURE BACKFLOW ASSY. |
| COMMUNITY DEVELOPMENT & PUBLIC WORKS DEPT. | | | STANDARD DETAIL: W-21.1 |

Plotted by: Craig Dobyns on 7/13/2016 File location: M:\Construction Standard Details\Approved Drawing Files (dwg)\Water\STDETL-W-21.1

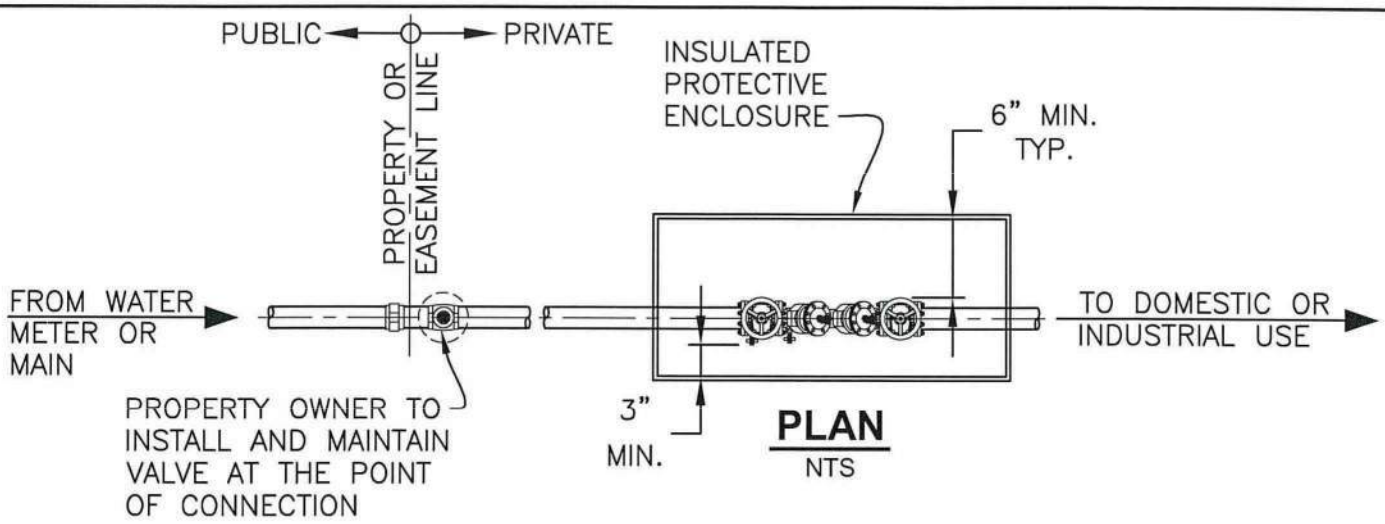


**PLAN**
NTS

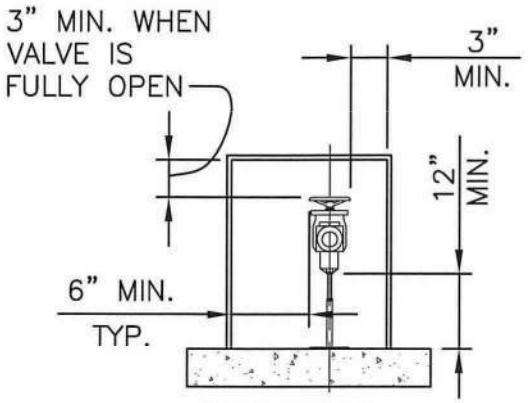


**SECTION**
NTS

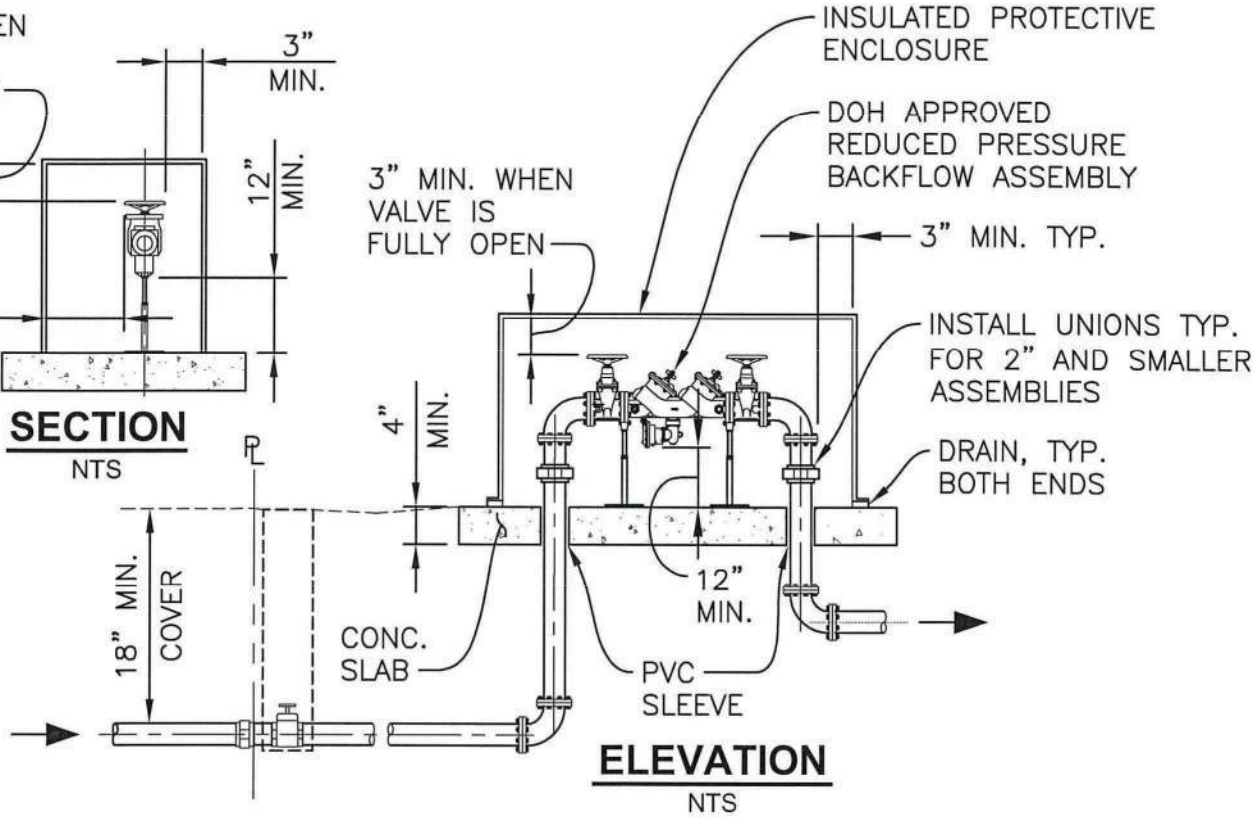


**ELEVATION**
NTS

**NOTES:**

1. INSULATED PROTECTIVE ENCLOSURE MUST COMPLY WITH THE AMERICAN SOCIETY OF SANITARY ENGINEERING (ASSE) 1060 OUTDOOR ENCLOSURES FOR BACKFLOW PREVENTION ASSEMBLIES. IT SHALL BE LOCKABLE WITH A KEY LOCK OR PADLOCK AND SHALL ALLOW FOR MINIMUM CLEARANCES AND PROVIDE ADEQUATE DRAINAGE.
2. RPBA SHALL BE INSTALLED ADJACENT TO THE METER AND HAVE NO BRANCH CONNECTION BETWEEN THE METER AND THE BACKFLOW ASSEMBLY. INSTALL RPBA HORIZONTALLY.
3. BACKFLOW ASSEMBLY MUST BE APPROVED FOR USE IN WASHINGTON STATE BY THE DEPARTMENT OF HEALTH (DOH). IT MUST BE TESTED BY A STATE CERTIFIED "BAT" AT THE TIME OF INSTALLATION, ANNUALLY, AFTER THE ASSEMBLY IS REPAIRED, MOVED OR AFTER AN INCIDENT AT OWNER'S EXPENSE.
4. BACKFLOW ASSEMBLY SHALL BE PURCHASED AND INSTALLED AS A UNIT, AS SHIPPED BY THE MANUFACTURER, WITH NO MODIFICATIONS TO ANY PART OF THE ASSEMBLY.
5. A MINIMUM OF TWO SUPPORTS MUST FIRMLY ANCHOR THE ASSEMBLY.

| APPROVED BY CITY ENGINEER: Jacob Brewster DATE: 12/31/18 | CITY OF AUBURN WASHINGTON | REDUCED PRESSURE BACKFLOW ASSY. (OUTSIDE INSTALLATION) |
|---|---|---|
| PUBLIC WORKS DEPARTMENT | | STANDARD DETAIL: W-22.2 |

Plotted by: Craig Dobyns on 12/31/2018 File location: M:\Construction Standard Details\Current Working DWG\Water\STDETL-W-22.2

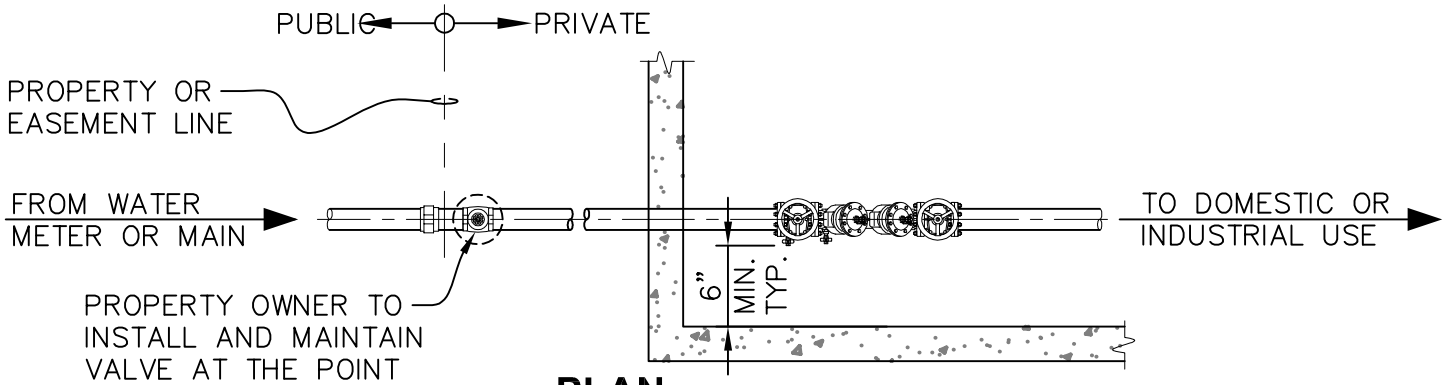


**PLAN**
NTS

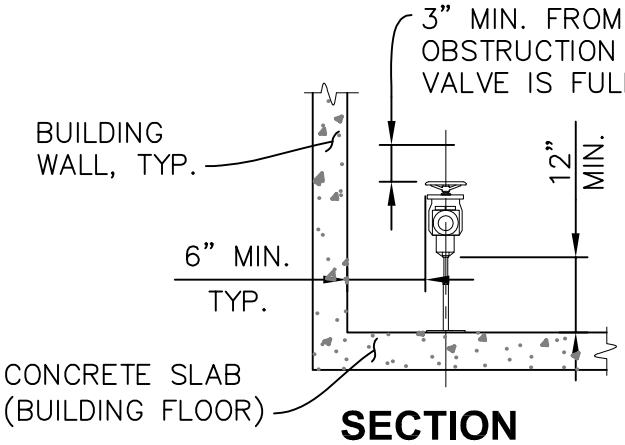


**SECTION**
NTS

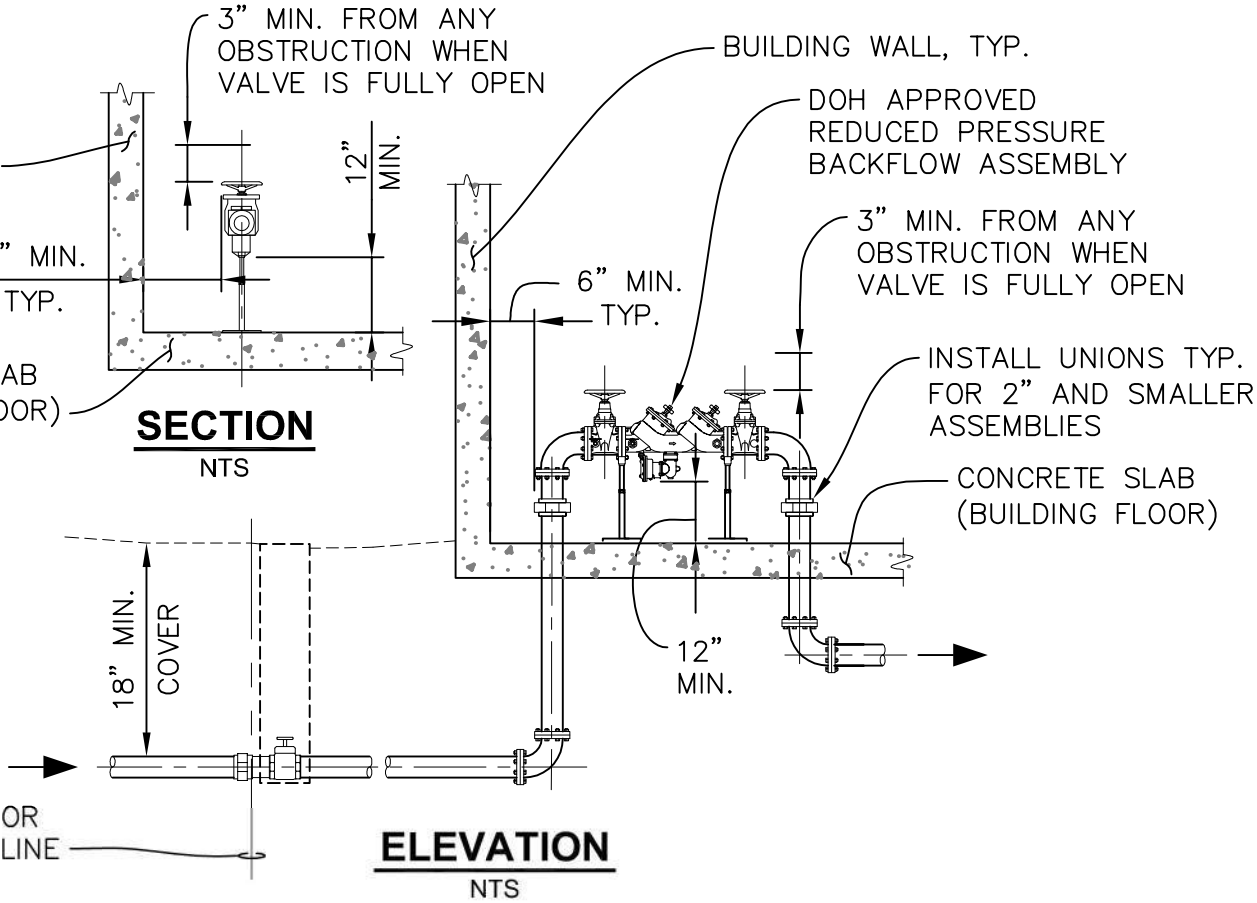


**ELEVATION**
NTS

**NOTES:**

1. RPBA INSTALLED INSIDE BUILDING SHALL HAVE NO BRANCH CONNECTIONS BETWEEN THE METER AND THE BACKFLOW ASSEMBLY. INSTALL RPBA HORIZONTALLY.
2. BACKFLOW ASSEMBLY MUST BE APPROVED FOR USE IN WASHINGTON STATE BY THE DEPARTMENT OF HEALTH (DOH). IT MUST BE TESTED BY A STATE CERTIFIED "BAT" AT THE TIME OF INSTALLATION, ANNUALLY, AFTER THE ASSEMBLY IS REPAIRED, MOVED OR AFTER AN INCIDENT AT OWNER'S EXPENSE.
3. BACKFLOW ASSEMBLY SHALL BE PURCHASED AND INSTALLED AS A UNIT, AS SHIPPED BY THE MANUFACTURER, WITH NO MODIFICATIONS TO ANY PART OF THE ASSEMBLY.
4. A MINIMUM OF TWO SUPPORTS MUST FIRMLY ANCHOR THE ASSEMBLY.
5. ADEQUATE DRAINAGE MUST BE PROVIDED.

| | | | |
|---|---|---|---|
| APPROVED BY CITY ENGINEER: Jacob Jewett | DATE: 01/05/2021 | CITY OF AUBURN WASHINGTON | REDUCED PRESSURE BACKFLOW ASSY. (INSIDE INSTALLATION) |
| PUBLIC WORKS DEPARTMENT | | | STANDARD DETAIL: W-23.3 |

Plotted by: Craig Dobyns on 12/10/2020 File location: M:\Construction Standard Details\Current Working DWG\Water\STDETL-W-23.3

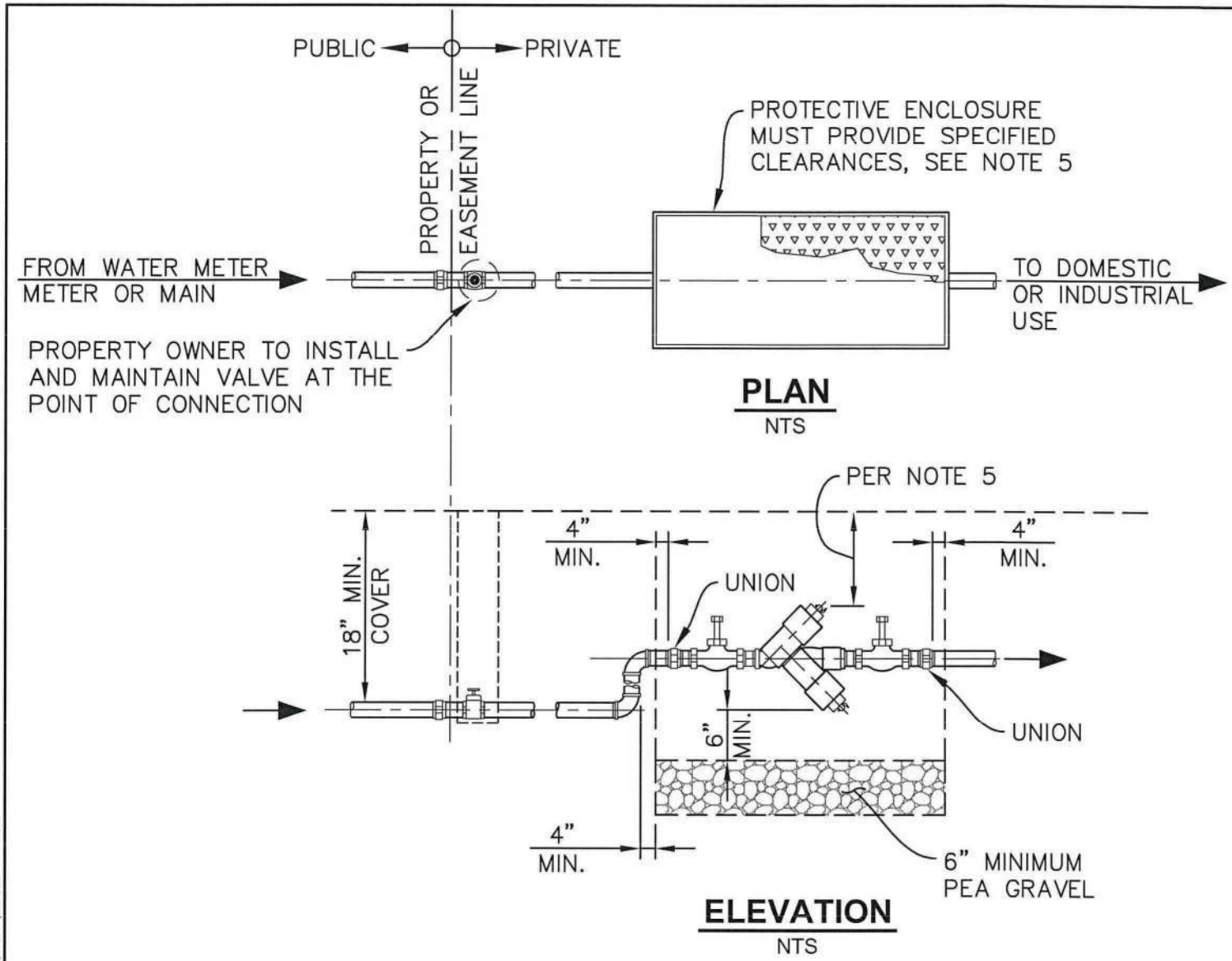


**NOTES:**

1. BACKFLOW ASSEMBLY MUST HAVE ADEQUATE SPACE CONSIDERATIONS FOR PROPER TESTING AND MAINTENANCE. A MINIMUM OF 12" CLEARANCE FROM ANY OBSTRUCTIONS ON THE TEST SIDE. A MINIMUM OF 6" CLEARANCE BELOW ASSEMBLY AND A MINIMUM OF 6" OF PEA GRAVEL IN THE BOTTOM OF THE BOX. THE MINIMUM CLEARANCE FROM THE TOP OF THE PEA GRAVEL TO THE BOTTOM OF THE ASSEMBLY IS 6".
2. DCVA MUST BE INSTALLED WITH TEST COCKS FACING UP. TEST COCKS MUST BE PLUGGED WITH BRASS OR PLASTIC PLUGS. INSTALL DCVA HORIZONTALLY.
3. BACKFLOW ASSEMBLY MUST BE APPROVED FOR USE IN WASHINGTON STATE BY THE DEPARTMENT OF HEALTH (DOH). IT MUST BE TESTED BY A STATE CERTIFIED "BAT" AT THE TIME OF INSTALLATION, ANNUALLY, AFTER THE ASSEMBLY IS REPAIRED, MOVED OR AFTER AN INCIDENT AT OWNER'S EXPENSE.
4. BACKFLOW ASSEMBLY SHALL BE PURCHASED AND INSTALLED AS A UNIT, AS SHIPPED BY THE MANUFACTURER, WITH NO MODIFICATIONS TO ANY PART OF THE ASSEMBLY.
5. MINIMUM CLEARANCE AT ABOVE ASSEMBLY SHALL BE: 9" (FOR 3/4" METER), 12" (FOR 1" METER), AND 14" (FOR 1 1/2" & 2" METER).

| | | |
|---|---|---|
| APPROVED BY CITY ENGINEER: Craig Dobyns 12/31/18 DATE: | CITY OF AUBURN WASHINGTON | DOUBLE CHECK VALVE ASSEMBLY (OUTSIDE INSTALLATION) |
| PUBLIC WORKS DEPARTMENT | | STANDARD DETAIL: W-24.2 |

Plotted by: Craig Dobyns on 12/31/2018 File location: M:\Construction Standard Details\Current Working DWG\Water\STDETL-W-24.2

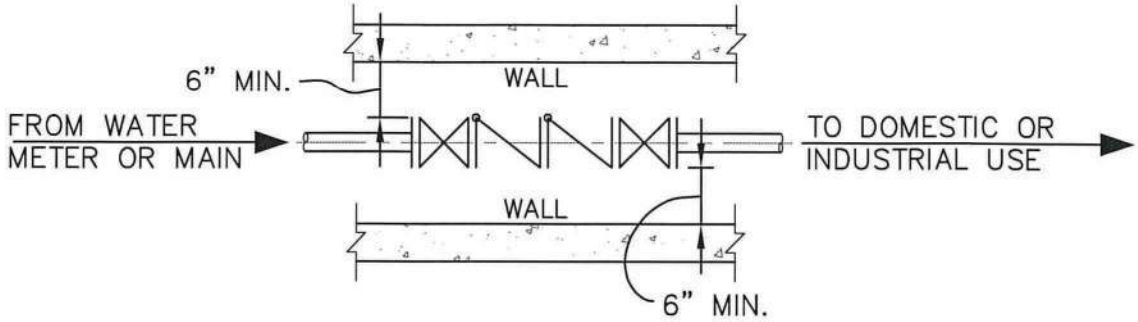


**PLAN**

NTS

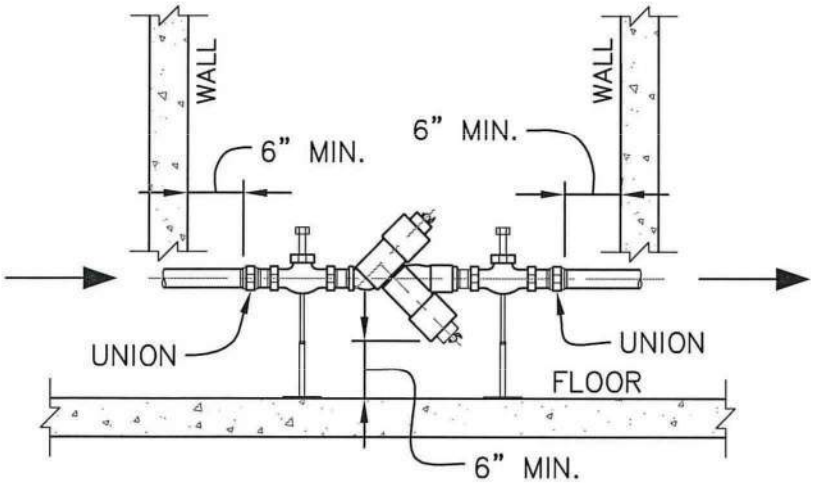


**ELEVATION**

NTS

**NOTES:**

1. BACKFLOW ASSEMBLY MUST HAVE ADEQUATE SPACE CONSIDERATIONS FOR PROPER TESTING AND MAINTENANCE. A MINIMUM OF 6" SIDE CLEARANCE BETWEEN DCVA AND WALL OR ANY OBSTRUCTIONS AND A MINIMUM OF 6" CLEARANCE BELOW ASSEMBLY SHALL BE PROVIDED.
2. DCVA MUST BE INSTALLED WITH TEST COCKS FACING UP. TEST COCKS MUST BE PLUGGED WITH BRASS OR PLASTIC PLUGS.
3. DCVA INSTALLED INSIDE BUILDING SHALL HAVE NO BRANCH CONNECTIONS BETWEEN THE METER AND THE BACKFLOW ASSEMBLY. INSTALL DCVA HORIZONTALLY.
4. BACKFLOW ASSEMBLY MUST BE APPROVED FOR USE IN WASHINGTON STATE BY THE DEPARTMENT OF HEALTH (DOH). IT MUST BE TESTED BY A STATE CERTIFIED "BAT" AT THE TIME OF INSTALLATION, ANNUALLY, AFTER THE ASSEMBLY IS REPAIRED, MOVED OR AFTER AN INCIDENT AT OWNER'S EXPENSE.
5. BACKFLOW ASSEMBLY SHALL BE PURCHASED AND INSTALLED AS A UNIT, AS SHIPPED BY THE MANUFACTURER, WITH NO MODIFICATIONS TO ANY PART OF THE ASSEMBLY.
6. TWO SUPPORTS, EITHER WALL OR FLOOR, ONE ON EACH SIDE OF THE ASSEMBLY, MUST FIRMLY ANCHOR THE ASSEMBLY.

| | | |
|---|---|---|
| APPROVED BY CITY ENGINEER: Jacob Brewster DATE: 12/31/18 | CITY OF AUBURN WASHINGTON | DOUBLE CHECK VALVE ASSEMBLY (INSIDE INSTALLATION) |
| PUBLIC WORKS DEPARTMENT | | STANDARD DETAIL: W-25.2 |

Plotted by: Craig Dobyns on 12/31/2018 File location: M:\Construction Standard Details\Current Working DWG\Water\STDETL-W-25.2

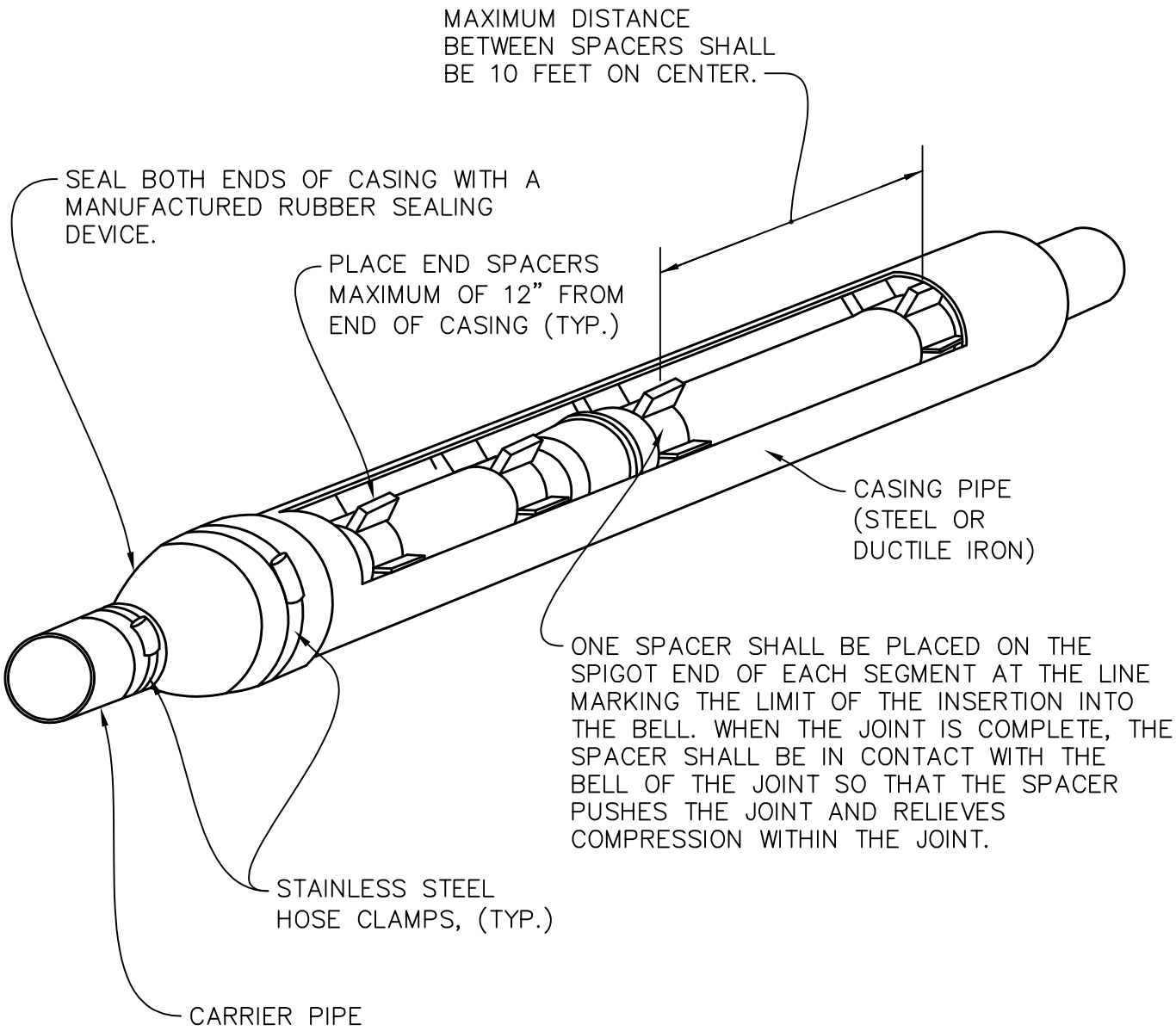


# PIPE CASING

NTS

NOTES:

1. CASING SPACERS SHALL BE "CENTER POSITIONING" TYPE.
2. MINIMUM RUNNER WIDTH SHALL BE 2 INCHES.
3. RUNNER HEIGHT SHALL BE SIZED TO PROVIDE:
   - 3.1. MINIMUM 0.75" BETWEEN CARRIER PIPE BELL AND CASING PIPE WALL AT ALL TIMES.
   - 3.2. MINIMUM 1" CLEARANCE BETWEEN RUNNERS AND TOP OF CASING WALL TO PREVENT JAMMING DURING INSTALLATION.
4. SPACER BAND WIDTH SHALL BE 8".

| APPROVED BY CITY ENGINEER: | DATE: | CITY OF AUBURN WASHINGTON | PIPE CASING DETAIL |
|---|---|---|---|
| Jacob Jewett | 02/09/2023 | | |
| PUBLIC WORKS DEPARTMENT | | | STANDARD DETAIL: W-26.2 |

Plotted by: Craig Dobyns on 2/9/2023 File location: M:\Construction Standard Details\Current Working DWG\Water\STDETL-W-26.2